CLABO GROUP Spa

365

ICE CREAM CABINET

GB TECHNICAL HANDBOOK

Index

Rev. 21/08/2008

DEAR CUSTOMER

For the safety of the operator, the display cabinet devices must be kept efficient. The aim of this manual is to explain use and maintenance of the display cabinet. The operator is responsible for ensuring that instructions are followed. No other use of the display cabinet is allowed other than that indicated in this manual.

1 STANDARDS AND REGULATIONS

1.1 Warranty:

The validity of the warranty is certified by the purchase receipt and the label attached to the tag on the product stating the bar and alphanumeric codes. This documentation must be kept in a safe place and must be stated or shown if requests for interventions are made whilst under guarantee. The warranty does not cover any damage caused during transport by third parties, by incorrect installation and maintenance, by negligence or carelessness of use and tampering by third parties. To obtain a technical intervention under guarantee, a written request must be sent to the Sales Direction or to the nearest dealer.

Clabo Group at their own discretion will decide whether to repair or replace the component or the entire appliance.

Clabo Group rule out any further responsibility also regarding direct and/or indirect damage. If the display cabinet is replaced the warranty period is not renewed or prolonged.

1.2 Environmental notes:

- **Packaging**

  Do not throw away the packaging but separate the different types of material (cardboard, wood, steel, polyester etc.) and dispose of them in compliance with the regulations in force in the country where the display cabinet is to be used.

- **Display cabinet out of service**

  At the end of the display cabinet's life span:
  - Remove the refrigerant from the display cabinet refrigerant circuit.
  - Empty all oil and remove all rubber parts (e.g. O-ring, gaskets)
  - The display cabinet must be sent for destruction.

IMPORTANT INFORMATION FOR USERS ACCORDING TO ART.13 LEGISLATIVE DECREE JULY 25, NO. 151 "ACCOMPLISHMENT OF DIRECTIVES 2002/98/CE, 2002/90/CE AND 2003/108/CE, CONCERNING THE REDUCTION OF THE USE OF DANGEROUS SUBSTANCES IN ELECTRIC AND ELECTRONIC EQUIPMENT, AS WELL AS THE WASTE DISPOSAL".

The sign of the crossed bin on the equipment or on its packing indicates that the product must be gathered separate from other waste at the end of its life. The equipment waste disposal must be accomplished using the RAEE waste disposal centres specifically authorized. Users can contact their jobber/distributor/producer for information. The correct separate collection and subsequent recycling, treatment and the environment-friendly disposal of the equipment helps to prevent possible negative effects on the environment as well as health problems and promotes the re-employment and/or recycling of the equipment components. The product disposal without respecting the law implies the enforcement of administrative sanctions provided for by the rule in force.

1.3 Identification:

The SERIAL NUMBER on the plate positioned on the back (operator side) of the display cabinet (fig.1) must be given when contacting the manufacturer or customer services.

Fig. 1

2 INSTALLATION

This product must be installed by qualified personnel.

2.1 Lifting and Movement:

The product is to lifted by a transport vehicle using transport pallets, in the following manner:

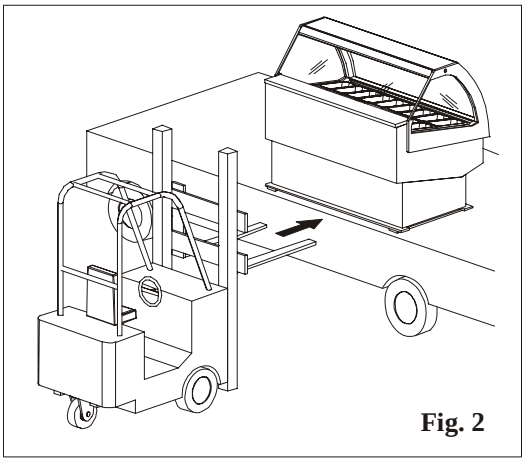

Fig. 2

- Position the forks at the level of the vehicle (e.g. lorry).
- Move forward with the transport pallet so as to insert the forks under the cabinet.
- Ensure that the cabinet is perfectly balanced on the forks before lifting it (fig.2).

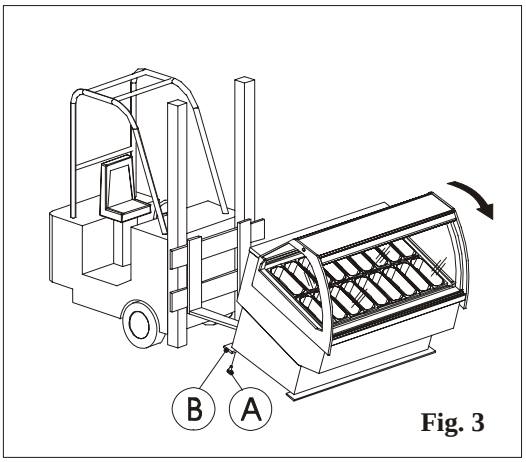

Fig. 3

- Position the cabinet on the ground.
- Lift the cabinet using the pallets as shown in figure 3.
- Unscrew the screws that anchor the lists to the base (fig.3 pos. A) and remove the base (fig.3 pos. B).

Proceed in the same way to remove the other base.
The cabinet must be moved manually when on the ground.

2.2 Positioning:

Please carry out the following operations to ensure correct positioning:

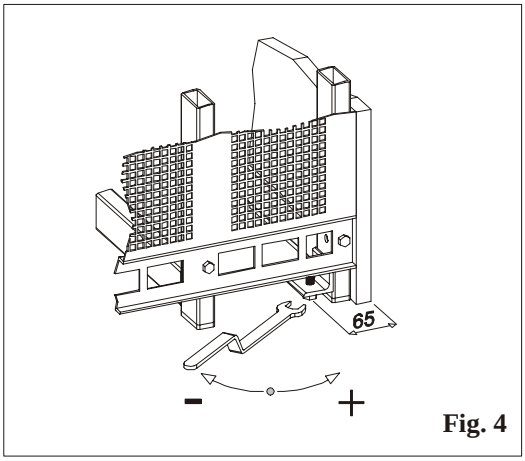

Fig. 4

- Position the display cabinet leaving enough space for use and maintenance in safe conditions as envisioned by the UNIEN 292/2 Standard point 6.2.1 and in paragraph 2.6
- Check that there is a suitable earth plant present envisioned by European Standards.
- Once positioned in the desired area, make the display cabinet level using the adjustable feet (fig. 4).

2.3 Environmental Specifications:

When positioning the display cabinet take into consideration that its operability is guaranteed in the following environmental conditions: temperature <30°C and relative humidity <55%.
It must also be checked that:

- there is sufficient circulation of air around the display cabinet but not strong currents;
- the display cabinet is not near any hot air sources;
- the display cabinet is not exposed to direct sunlight;
- the cooling air grills of the condenser are not blocked (fig. 5 pos. A);
- air conditioning or heating in the room are not directed onto the display cabinet.

The above-mentioned indications must be respected to prevent malfunctioning, which will not be covered by the warranty.

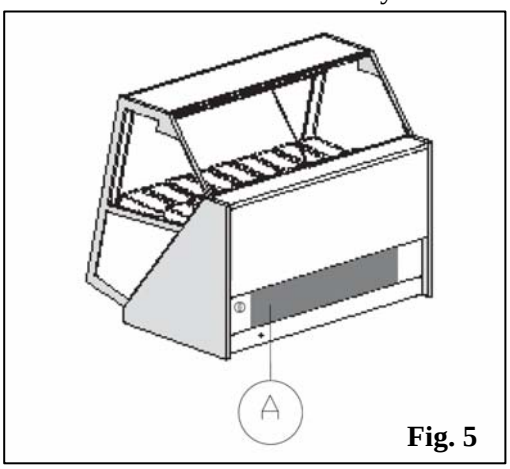

Fig. 5

2.4 Canalization:

Before carrying out channelling check that the display cabinets are all at the same height by adjusting the relevant feet and check that they are perfectly level horizontally.
To channel the display cabinet, proceed as follows (fig. 6):

- insert pin A and block it using locking pin B;
- place the display cabinets side by side so that pins A are inserted perfectly in the seats and block them;
- insert the screws into the two bases and block them;
- insert the two screws D under the roof for alignment and block them;
- insert screw C onto the upright support plate and block it;
- insert the partition support;
- insert the crystal partition G into the relevant seat and connect the heating cables;
- insert the limit switches carter under the roof.

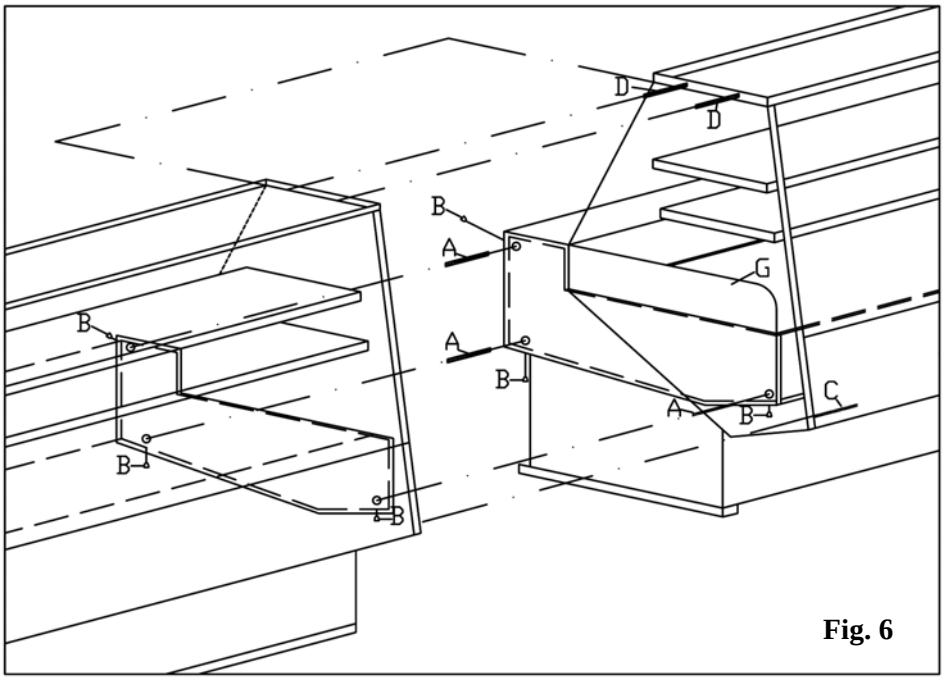

Fig. 6

2.5 Hydraulic connection:

For the display cabinets with water-cooled condenser the inlet and outlet pipes must be connected to the mains water system. The inlet pipe can be recognised as it is covered by heat insulation.
ATTENTION! Before using the display cabinet make sure taps are open and that water flows regularly (fig. 7).

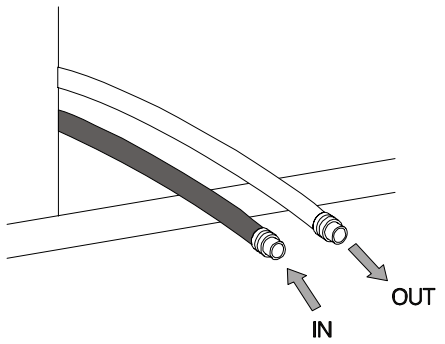

Fig. 7

2.6 Electrical Connection:

Before installation, check that a suitable earth plant is present as envisioned by the regulations in force in the country of sale. Check that the mains voltage is compatible with the features stated on the plate positioned on the operator side of the display cabinet (see fig. 1 page 3). Also check that the line upstream from the display cabinet is appropriately dimensioned to support the load of the display cabinet itself.
ATTENTION! Voltage fluctuation above 10% of the nominal voltage stated on the plate can cause permanent damage to the compressor and other electro-mechanical equipment. In this case they are not covered by the warranty.
Respect national regulations for electrical installations.
Position the master switch in the OFF position.
The display cabinet is supplied with a 5-wire cable;
Yellow-green = Earth
Blue = Neutral
Brown = Phase 1
Grey = Phase 2
Black = Phase 3
ATTENTION! Never cut or remove the yellow-green cable mentioned above.
The five power supply wires must be connected to the back-bone network, which a san efficient earth system, in compliance with national and local regulations (where present) regarding electrical installations and suitable for the electric absorption of the display cabinet, refer to chapter 6 – Total Absorbed Power.
ATTENTION! The electrical connection to the mains must be made using the five wires supplied. Moreover, the central plant to which the display cabinet is connected must have a switch with contact opening of at least 3 mm protected by fuses.
ATTENTION! Apply a suitable method of fixing to the power supply cable on the connection box, making reference to the table shown below.

APPLIANCE NOMINAL CURRENT [A]	NOMINAL SECTION [mm^2]	
	FLEXIBLE CABLES [mm^2]	EARTH CABLES [mm^2]
3	0,5 ÷ 0,75	1 ÷ 2,5
3 ÷ 6	0,75 ÷ 1	1 ÷ 2,5
6 ÷ 10	1 ÷ 1,5	1 ÷ 2,5
10 ÷ 16	1,5 ÷ 2,5	1,5 ÷ 4
16 ÷ 25	2,5 ÷ 4	2,5 ÷ 6
25 ÷ 32	4 ÷ 6	4 ÷ 10
32 ÷ 40	6 ÷ 10	6 ÷ 16
40 ÷ 63	10 ÷ 16	10 ÷ 25

3 FUNCTIONING

3.1 Start-up:

1) Activate the mains master switch.
2) Activate the display cabinet master switch, which is found on the rear protection panel. To introduce the electric power supply to the display cabinet, place the master switch at position “1” (fig. 8 pos. A).

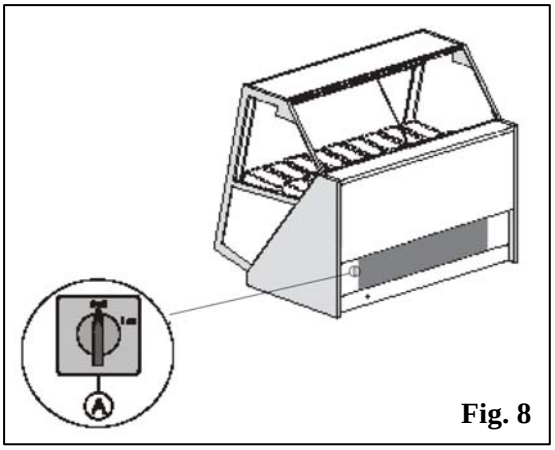

Fig. 8

3.2 Command Console:

The refrigerating plant of the display cabinet is controlled by means of an electronic console. The electronic console consists of:
1) Keyboard
2) Control board

3.3 Keyboard

T640: horizontal keyboard with 6 keys (185x38mm).

To visualise or change the set point. When programming this button is used to select a parameter or to confirm a value.

This button is used during programming for going through the parameter codes or for increasing their value.
If pressed and then released you will visualise the controlled section (LOC, SE2, ALL).
If pressed continually for 3 seconds this button allows you to gain access to the sections menu.

This button is used during programming for going through the parameter codes or decreasing their value.

Keep this button pressed for 3 seconds to start the manual defrosting cycle.

Use this button to turn the display cabinet lights on and off.

Turn the instrument on and off.

3.4 The meaning of the leds

There are a series of luminous points on the display, the meaning of which you will find in the table below:

LED	MODE	Function
❄	ON	Compressor on
❄	FLASHING	Programming phase (flashing with LED ✤)
✤	ON	Ventilator and evaporator active
✤	FLASHING	Programming phase (flashing with LED ❄)
❄	ON	Defrosting active
❄	FLASHING	Dripping time underway
	ON	Keyboard in “ALL” mode
	FLASHING	Keyboard in RVD mode (remote control)
	ON	ALARM SIGNAL - In the “Pr2” programme it indicates that the parameter is also present in “Pr1”

3.5 How to visualise and change the set point

1. Press the SET key and release it to see the set point: you will visualise the set point immediately.
2. To change the set point press the SET key and keep it pressed for 3 seconds: the led will flash ❄ ;
3. To change the value activate ▼ and ▲ .
4. To memorise the new set point, press the SET key or wait 15 seconds to exit the programming feature.

N.B. It is very important to bear in mind that the optimal air temperature varies considerably with the variation of the composition of the ice-cream (in particular the percentages of sugars and fats).
Before placing the ice-cream in the display cabinet you should wait about 45 minutes from the start-up of refrigeration in order to allow the plant to reach its set functioning temperature.

3.6 How to set up a manual defrosting cycle

1. Press the DEF key and keep it pressed for more than 2 seconds.

3.7 The ON/OFF Function

By pressing the **ON/OFF** key the instrument will show “OFF”.
In this configuration the loads of all of the regulations will be deactivated. To turn the instrument back ON press the **ON/OFF** key again.
The OFF condition allows for the exclusion of the instrument from monitoring without generating any type of alarm.

N.B. The LIGHT key remains active in the OFF position.

3.8 Local Alarms

MESSAGE	CAUSE	STATE OF OUTPUTS
“ P1 ”	Thermostat probe failure	Output according to “ Con “ and “ COF “ parameters
“ P2 “	Evaporator probe failure	Unchanged
“ P3 ”	Auxiliary probe failure	Unchanged
“ HA “	High temperature alarm	Unchanged
“ LA “	Low temperature alarm	Unchanged
“ EE ”	Memory anomaly	
“ EAL “	Digital input alarm	Unchanged
“ BAL ”	Blockage alarm from digital input	Regulation outputs deactivated
“ rtc “	Clock alarm	Unchanged
“ rtF “	Clock alarm failure / not present	Alarm output active, other outputs unchanged.

3.9 Automatic defrosting

The display cabinet is complete with an automatic “warm gas” defrosting system that allows for rapid elimination of ice formations on the evaporator fins. The automatic defrosting process is set in the standard configuration every 8 hours.

3.10 Functioning with differentiated and reserve sector

In this configuration the ice-cream display cabinet and the differentiated / reserve sector are controlled with a single keyboard. The luminous red coloured led that appears on the display on the left at the top indicates the section in which it is located, according to the following table:

	ON	Keyboard in “ALL” mode
	OFF	Keyboard in “LOC” mode (ICE-CREAM MACHINE)
	FLASHING	Keyboard in RVD mode (DIFFERENTIATED / RESERVE SECTOR)

Please follow the instructions below to change sections:

1. To change the section press this key for 3 seconds ▲ .
2. You will see the message corresponding to the current keyboard programming (LOC, SE2, ALL).
3. Select the selection that you wish (LOC, SE2, ALL) using the ▲ and ▼ keys.
4. Press the SET key to confirm and wait 15 seconds before exiting the programming mode.

The messages that appear on the display are as follows:

LOC: The keyboard shows the temperature values measured, the state of the outputs and the alarms of the section to which it is connected (Default: ice-cream machine section). All of the commands given by the keyboard will be carried out by the local section only (Default: ice-cream machine section).
To see the set point of the ice-cream machine section and change it you must therefore enter the local section (LOC) following the instructions outlined above and then follow the instructions given in paragraph 3.5;

SE2: The keyboard controls the section corresponding to number "2"(Default: SE2= differentiated / reserve sector) and shows the temperature values measured, the state of the outputs and the alarms of that section. All of the commands given by the keyboard will be carried out by that section only.
To see the set point of the differentiated / reserve sector and change it you must therefore enter the "SE2" section following the indications outlined above and then follow the instructions given in paragraph 3.5;

ALL: The keyboard shows the temperature values measured, the states of the outputs and the alarms of the section to which it is connected (ice-cream display cabinet), but the commands given by the keyboard will also be transferred to the other section (differentiated / reserve sector). "As2" will appear on the display in case of alarm, this indicates that the differentiated / reserve sector is in alarm mode. To see details of the type of alarm in question programme the keyboard in such a way that it assumes control of the differentiated / reserve sector.

N.B. To turn on or turn off the ice-cream machine sector and the differentiated / reserve sector at the same time enter the "ALL" section and activate the ON/OFF function. To turn the ice-cream machine section on or off or the differentiated / reserve section on or off, enter the relative section (LOC, SE2) and activate the ON/OFF function

3.11 Stopping the Machine:

To stop the plant act on switch (A), which is found behind the rear protection panel. Position the master switch at "0" (fig. 8 pos. A) disconnecting the display cabinet power supply.

4 MAINTENANCE

4.1 Preliminary Operations:

Before carrying out any maintenance or cleaning the electric power supply must be disconnected by deactivating the plant master switch regarding the room where the display cabinet is positioned.

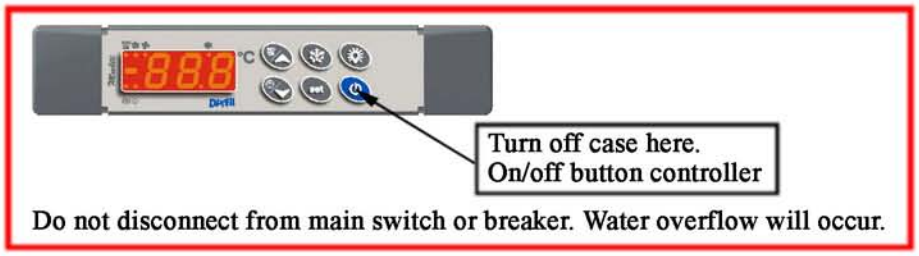

4.2 Cleaning the condenser:

The deposit of dust and dirt in general on the condenser fins (air) reduces the efficiency of the plant until functioning is prevented and causing damage to the compressor. It is therefore absolutely necessary to periodically clean the condenser (every 20-30 days) as indicated below:

- Disconnect the electric power supply;
- Remove the rear metal grid;
- Remove the dust and dirt present on the condenser fins using a brush or suction device (fig. 9)
- Do not use stiff or metal objects to clean the condenser as they could damage it.

Fig. 9

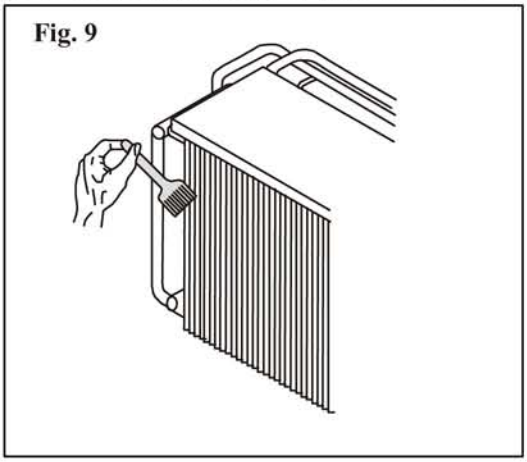

4.3 Periodical defrosting:

For optimal functioning of the display cabinet, it is recommended to perform prolonged defrosting, shutting the display cabinet down for at least 12 hours, by deactivating the electric power supply switch (A) positioned on the rear protection panel of the display cabinet (fig. 8).

4.4 General Cleaning:

- **Steel surface:** Clean using a sponge or damp cloth, using water and neutral detergents, rinse and dry using a soft cloth.
- **Wooden surface:** Clean using a sponge or damp cloth, using water and neutral detergents, rinse and dry using a soft cloth.
- **Glass surface:** Clean using a sponge or damp cloth, using water and neutral detergents, rinse and dry using a soft cloth.

5 PRACTICAL TROUBLESHOOTING GUIDE

1) Temperature of the display area not low enough (i.e. ice cream too soft)

PROBABLE CAUSE	PROBABLE SOLUTION
Evaporator blocked by ice.	Defrost as indicated: - transfer the product from the display cabinet to a freezer at –20°C. - disconnect the main switch for 10/12 hours in a way to defrost the evaporator (point 4.3).
Condenser blocked by dust or other.	Clean the condenser as indicated in point 4.2 Remove everything that obstructs regular air flow to the condenser.
The fans do not function and/or their blades are damaged.	Request after-sales service for replacement
The display cabinet is exposed to air currents or direct sunlight	The display cabinet does not function in these conditions; remove the display cabinet from the air currents and/or direct sunlight
Thermostat does not function correctly. With refrigerant system functioning perfectly the thermostat maintains a higher temperature than that set.	Call the after-sales service.
There is no regular chilled air flow (the “blade of air”) on the ice cream.	Check the air circuit (fan area, area below the evaporator) and remove any obstructions to the circulation of cold air.
No water.	Check that there is flow of water; if so, call a technician due to possible breakage of the water valves or pressure switch or other causes.

2) The water formed by defrosting is not drained (i.e. the water obtained from melting ice during automatic or manual defrosting).

PROBABLE CAUSE	PROBABLE SOLUTION
The water drain pipe that goes from the cold tank to the tank in this water is conveyed (to be made to evaporate) is blocked.	Re-open the drain pipe
The display case is positioned inclined on the ground in a way that the water from defrosting does not go towards the outlet hole.	Level the display cabinet as described in point 2.2. It must be absolutely flat.

3) The compressor never stops or works for long periods of time.

PROBABLE CAUSE	PROBABLE SOLUTION
The room temperature is very high (e.g.: above +32°C).	If the room temperature cannot be lowered (e.g. with air conditioner) the compressor must work almost continuously.
Air condenser blocked.	Clean the condenser as indicated in point 4.2
The thermostat is fixed at a room temperature that is too low.	Adjust the thermostat to a higher temperature, as indicated in point 3.5
The fans are at a standstill.	Call the after-sales service to identify the cause and to replace them if necessary

4) The display cabinet does not work

PROBABLE CAUSE	PROBABLE SOLUTION
The plug is not inserted into the socket.	Insert the plug (see point 2.6)
Any automatic switch tripped.	Re-insert the automatic switch.
Display cabinet master switch open.	Close the display cabinet master switch (see point 3.1)

5) The light does not work

PROBABLE CAUSE	PROBABLE SOLUTION
Light switch not closed.	Close the light switch
The fluorescent bulb is not inserted correctly into the socket.	Insert the bulb correctly.
The bulb has burned out.	Replace the bulb
The “starter” is finished.	Replace the “starter”

6 TECHNICAL DATA

MODELS	COOLING CAPACITY [W]	TOTAL ABSORBED POWER [W]	ELECTRICAL POWER SUPPLY	REFRIGERATING GAS	OPERATING TEMPERATURE FROM THE AIR [°C]	DIMENSIONS		
						L-mm	P-mm	H-mm
365 G6	1550	1900	**230/3/60**	R404a	-18/-20	1050	1205	1400
365 G9	2300	2980	**230/3/60**	R404a	-18/-20	1575	1205	1400
365 G12	2900	3790	**230/3/60**	R404a	-18/-20	2100	1205	1400
365 A30	1550	2120	**230/3/60**	R404a	-18/-20	1575	1205	1400
365 C30	1550	1910	**230/3/60**	R404a	-18/-20	1497	1205	1400
365 A45 (*)	1200	2040	**230/3/60**	R404a	-18/-20	1360	1205	1400

N.B. The showcases' external dimensions are referred to the "raw" model, i.e. without the encumbering aesthetic shoulder. Each single showcase or canalized showcases should be added no. 2 end shoulders of 40 mm each in length.
In corner showcases the external dimensions have been taken as in the side picture.

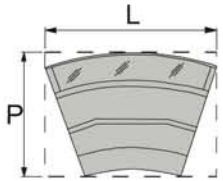

(*) "Warm gas" hermetic internal unit

7 ELECTRICAL DIAGRAMS

The following electrical diagrams will have to be used by qualified personnel on the basis of the current regulations in vigour in the country of sale.

ELECTRICAL DIAGRAM 365 (G6 – G9 – G12)

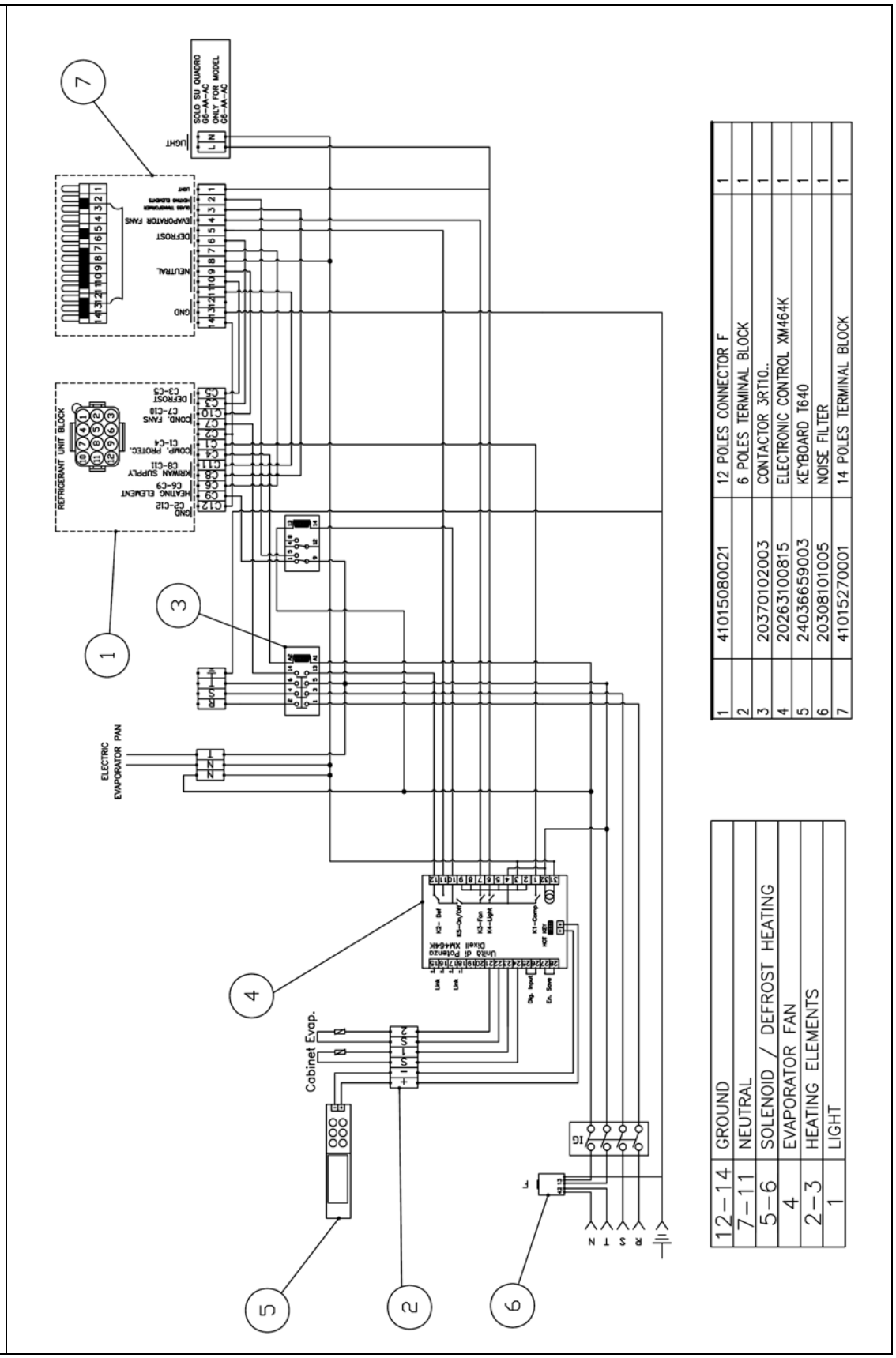

1	41015080021	12 POLES CONNECTOR F	1
2		6 POLES TERMINAL BLOCK	1
3	20370102003	CONTACTOR 3RT10..	1
4	20263100815	ELECTRONIC CONTROL XM464K	1
5	24036659003	KEYBOARD T640	1
6	20308101005	NOISE FILTER	1
7	41015270001	14 POLES TERMINAL BLOCK	1

12–14	GROUND
7–11	NEUTRAL
5–6	SOLENOID / DEFROST HEATING
4	EVAPORATOR FAN
2–3	HEATING ELEMENTS
1	LIGHT

365 TS WITH AUTODIAGNOSIS UTILITY CABLING

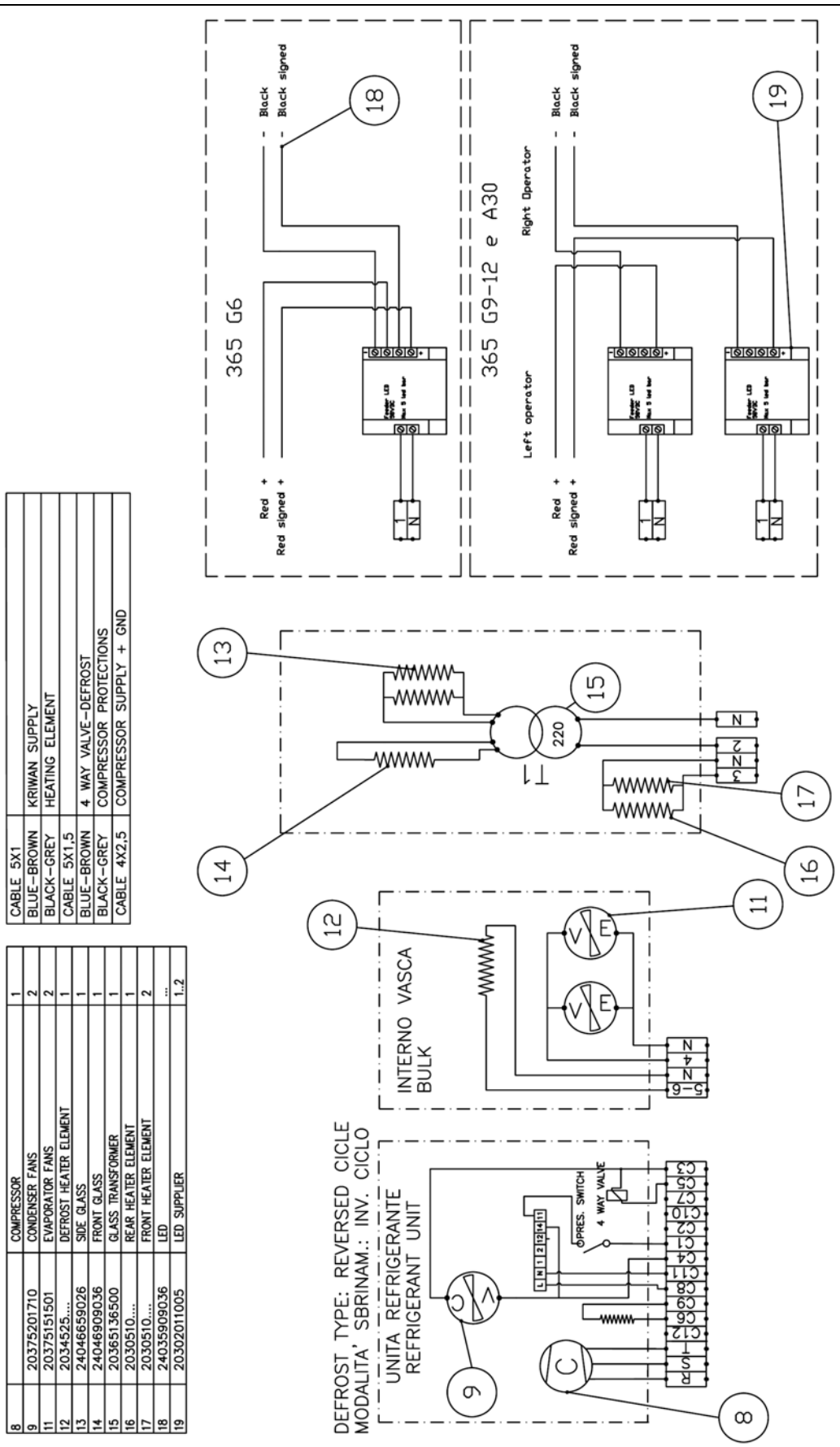

8	COMPRESSOR	1
9	2037520171 0	CONDENSER FANS	2
11	2037515150 1	EVAPORATOR FANS	2
12	2034525....	DEFROST HEATER ELEMENT	1
13	2404659026	SIDE GLASS	1
14	2404690903 6	FRONT GLASS	1
15	2036513650 0	GLASS TRANSFORMER	1
16	2030510....	REAR HEATER ELEMENT	1
17	2030510....	FRONT HEATER ELEMENT	2
18	2403590903 6	LED	...
19	2030201100 5	LED SUPPLIER	1.2

CABLE 5X1	KRIWAN SUPPLY
BLUE-BROWN	HEATING ELEMENT
BLACK-GREY	
CABLE 5X1,5	4 WAY VALVE-DEFROST
BLUE-BROWN	COMPRESSOR PROTECTIONS
BLACK-GREY	COMPRESSOR SUPPLY + GND
CABLE 4X2,5	

365 TS WITH AUTODIAGNOSIS LED CABLING (G6 – G9 – G12)

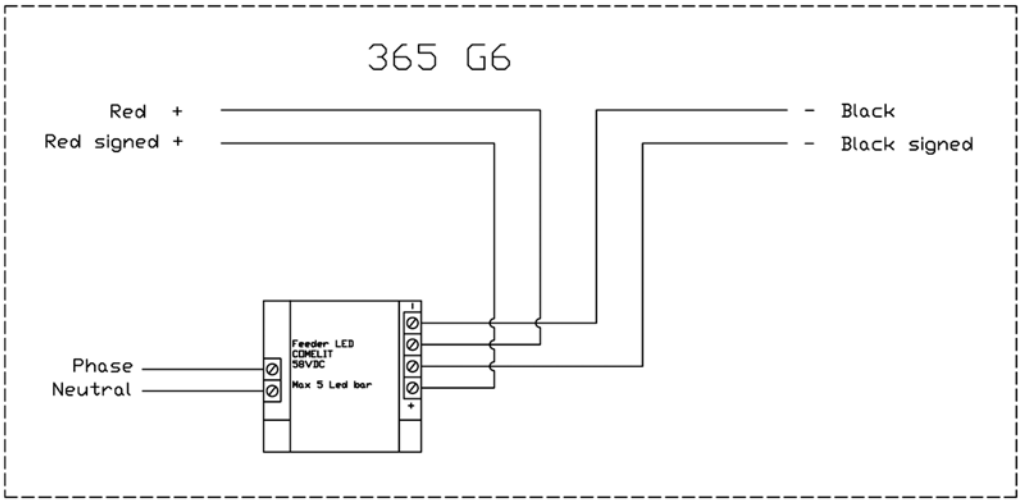

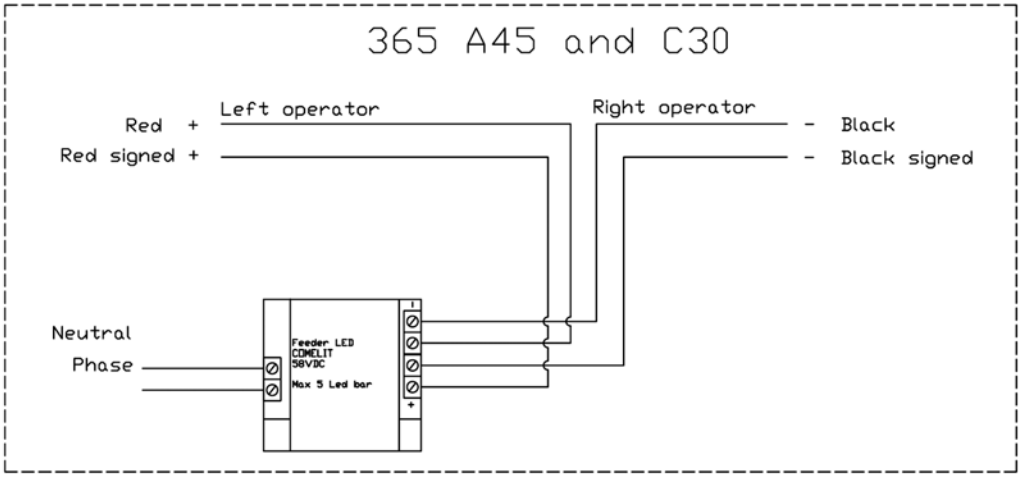

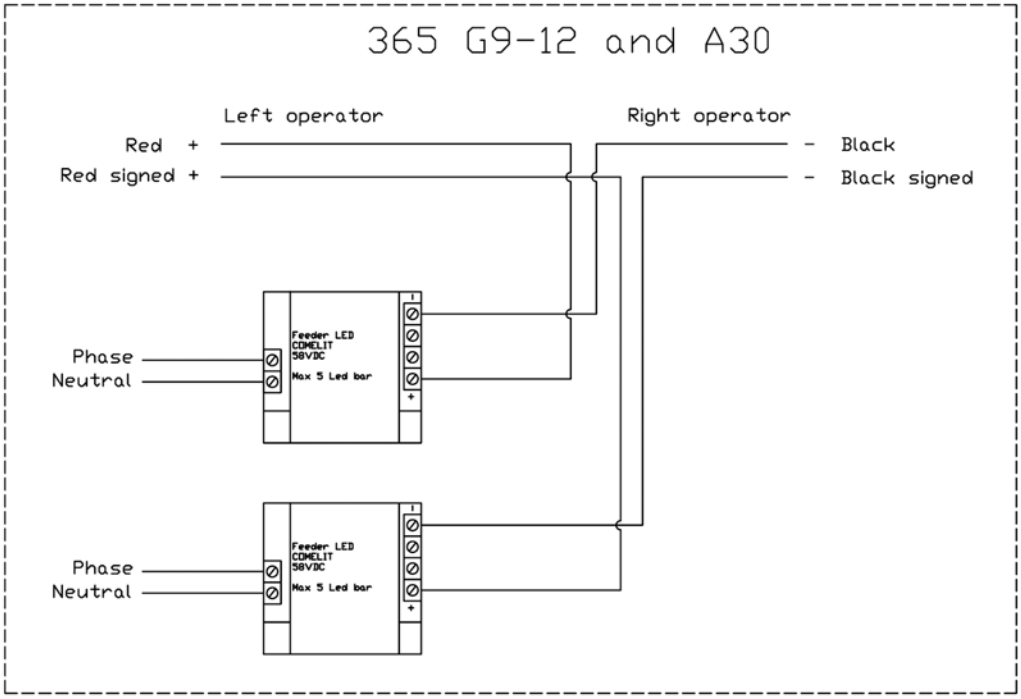

8 REFRIGERATOR PLANT DIAGRAM

REFRIGERATOR PLANT DIAGRAM 365 (G6 – G9 – G12)

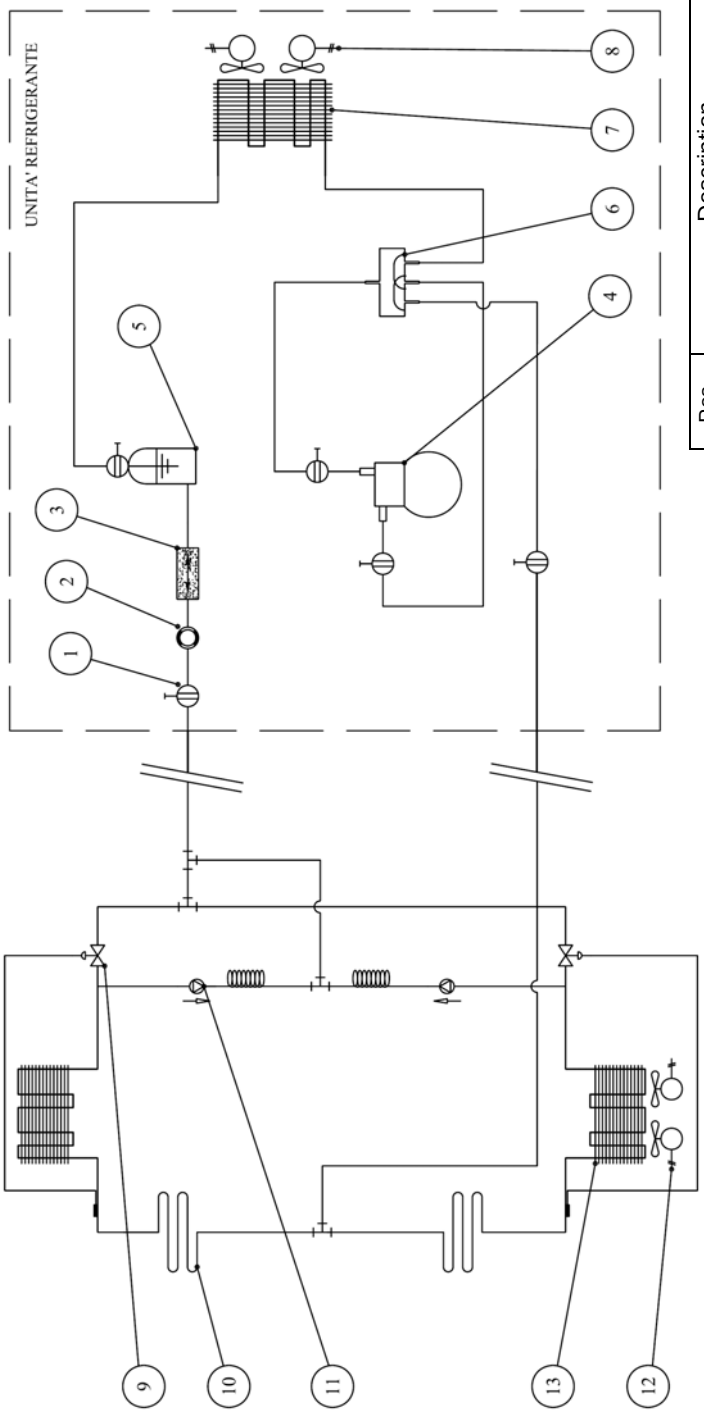

Pos.	Description
1	Tap
2	Spy glass (OPTIONAL)
3	Filter
4	Compressor
5	Liquid receiver
6	4 way valve
7	Condenser
8	Fan
9	Thermostatic valve
10	Tank defrost pipe
11	VNR
12	Evaporator fan
13	Evaporator

9 ATTACHED (ONLY FOR EXTERNAL UNIT)

Installation instructions:

1. Place the condensing unit in order to ensure an adequate fresh air flow on unit condenser and compressor. Therefore don't place the condenser in front of a wall or an obstacle which can block the ventilation. Verify that the ambient in which the condensing unit is placed would have adequate dimensions and would ensure a correct airing. The wrong position of the condensing unit would cause the cabinet misfunctioning for the non-complete condensation or compressor super-heating. In addiction the ambient in which the unit is placed must ensure a temperature not lower than the one of the cabinet evaporator, in order to avoid dangerous liquid movements to the compressor.

2. In placing the condensing unit be careful on leaving an adequate space around the unit for maintenance.

3. In cutting the tubes, avoid the entrance of metallic parts inside the system. It is advisable to use a tube-cutter having the same diameter of the tubes, in order to avoid deformations.

4. In tubes connections from unit to cabinet, use copper tubes having an adequate diameter. For this reason it can be useful to follow the indication reported in the tables below:

LOW TEMPERATURE CABINET (-18/-20°C) CYCLE INVERSION DEFROSTING SYSTEM		
	Within 10 mt	*Within 20 mt*
High pressure line	Ø 12 mm	Ø 14 mm
Low pressure line	Ø 14 mm	Ø 16 mm

NORMAL TEMPERATURE CABINET (+4/+6°C)		
	Within 10 mt	*Within 20 mt*
High pressure line	Ø 6 mm	Ø 8 mm
Low pressure line	Ø 12 mm	Ø 14 mm

In general is necessary to adequate the tube diameter depending on the complexity of the plant. For example if the pattern of the tubes between cabinet and unit contains several curves and elbows, it is advisable to increase the diameter in order to reduce the risk of problems.

5. Insulate the tubes; in particular if the refrigeration system is configured with hot gas defrosting it is necessary to insulate the low pressure and the defrosting lines, while if the plant has cycle inversion both low and high pressure lines must be insulated. In fact in this case there is not the defrosting line.

6. If the unit is placed above the cabinet it is important to make siphons in low pressure line every 2 meters of difference in height, in order to ensure the oil return to compressor. For the same reason in case of horizontal tubes, the low pressure line must have a 3% slope towards the compressor.

7. In case of units placed within 10 meters from the cabinet the oil inside the unit is sufficient to ensure the correct functioning. In case of units having distances longer than 10 meters it is necessary to add small quantities of oil.

8. Verify that the tap are opened and create the vacuum inside the system with an adequate vacuum pump connected both with the low and the high pressure line, up to obtain a remainder pressure of about 0.2 mmHg (27 Pa, 2.7 x 10^{-4} bar, 2.6 x 10^{-4} atm).

⚠ DON'T STARTUP THE PLANT IN VACUUM CONDITIONS.

9. Load the system with R404A. Control if there are any gas losses on weldings and on threaded connections. Close the valves with their hoods to ensure a better gas-tight.

10. Make electrical cables wirings to the net depending on the voltages recommended on unit label and on the indications reported in the paragraph below. Start up the unit verifying the absence of strange or excessive noises and the heating of the compressor bottom.

Electrical Wirings:
In order to well realize the electrical wirings, follow the indication below:

LOW TEMPERATURE CABINET (-18/-20°C)

SEMI-HERMETIC COMPRESSOR 400/3/50 AND CYCLE INVERSION DEFROSTING SYSTEM:

Base Dimensions (mm) : Power lower to 1.5 HP : 640x640 H=350
Power upper or equal to 1.5 HP : 740x640 H=350

- Cabinet general supply: wire 5x2.5 (3 Phases, Neutral and Ground)
- Wire 4x2.5: 3 Phases Compressor + Ground;
- Wire 5x1.5: Blue-Brown = 4 way valve for defrosting;
  Black-Grey = Pressure switch wires (short-circuit if the unit has no pressure-switch);
  Yellow/Green =Ground.
- Wire 5x1: Blue-Brown = kriwan supply;
  Grey-Black = Compressor oil heater;
  Yellow/Green =Ground.

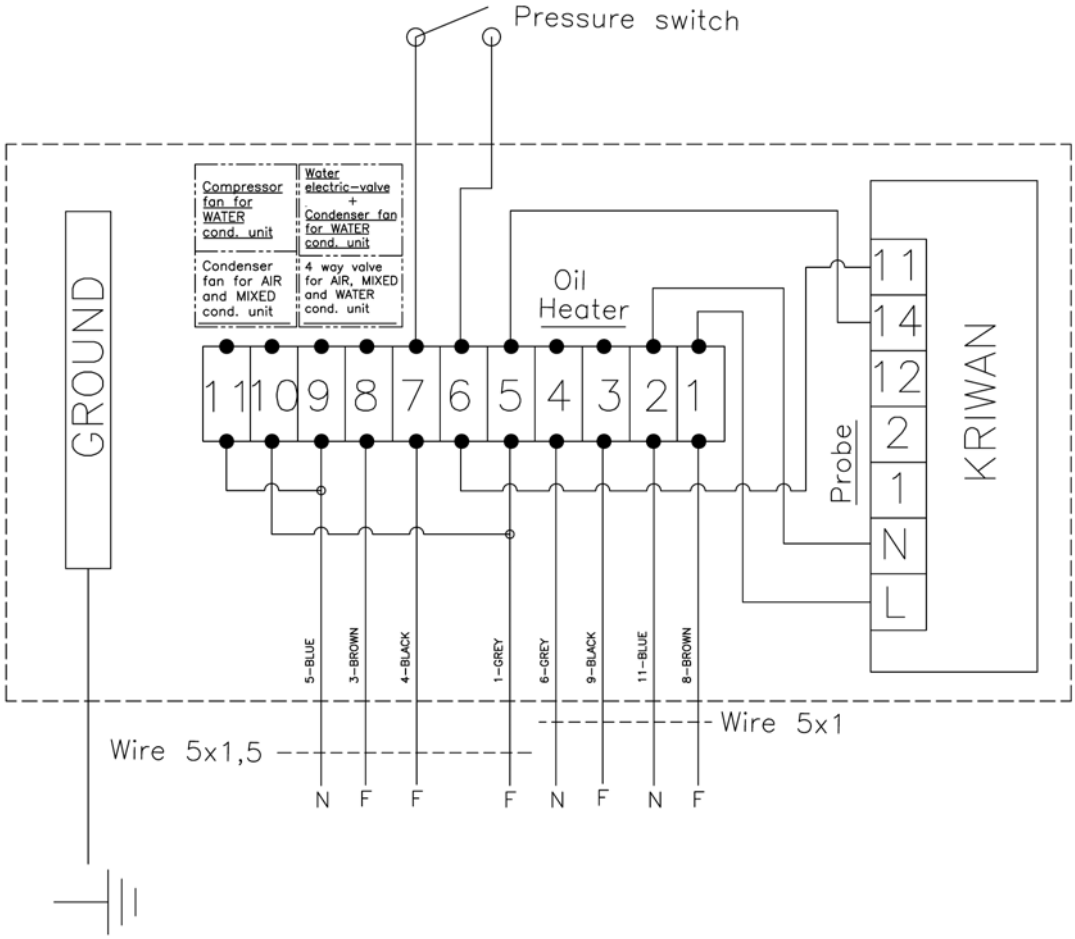

Internal wirings for units having semi-hermetic compressor and cycle-inversion defrosting system.