CLABO GROUP Spa

ITALIANA

TN CABINET

TECHNICAL HANDBOOK

CONTENTS

1 STANDARDS AND REGULATIONS 4

1.1 Warranty 4

1.2 Environmental notes 4

1.3 Identification: 5

2 TECHNICAL NOTES: 6

2.1 Description of the cabinet 6

2.2 Overall Dimensions 7

2.3 Electrical Ratings 8

3 RECEIPT AND INSTALLATION 8

3.1 Packaging and Transportation 9

3.2 Handling and Lifting off of the Pallet 9

3.3 Positioning 10

3.4 Environmental Specifications 10

3.5 Service of condensing units and under frame components 11

3.6 Electrical connections: 11

4 FUNCTIONING 13

4.1 Start-up 13

4.2 Control Panel XW20L 13

4.3 The meaning of the leds 14

4.4 How to see the min temperature 14

4.5 How to see the maximum temperature 14

4.6 How to reset the Max and min temperature recorded 14

4.7 How too see and modify the set-point 14

4.8 To start a manual defrosting 15

4.9 The ON/OFF function 15

4.10 Local alarms 15

4.11 Automatic defrosting 15

4.12 Stopping the Machine 15

5 MAINTENANCE AND CLEANING 16

5.1 Preliminary 16

5.2 Condenser cleaning 16

5.3 General Clenaing: 16

6 PRACTICAL TROUBLESHOOTING GUIDE 18

7 Electrical Scheme 20

8 Lights Connections 21

9 Refrigerating System 22

Rev. 1.0 – 20/03/2009

DEAR CUSTOMER

This Manual or Technical Guide is a part of the Product and its target is to show use and maintenance of the cabinet. The operators have the responsibility of reading it and following the instruction reported on it. No other use of the display cabinet is allowed other than indicated in this manual.

This manual must be kept in good conditions and follow the cabinet during its entire operative life until dismissing, in order to have all the information needed for maintenance of the qualitative and safety standards.

The Firm will not assume any responsibility for damage to people, animals or things, caused by failure to observe the indications reported on the present Manual or by uses of the equipment for any purposes other than the ones for which it has been designed and sold.
For operator's safety, all equipment devices must be kept in constant efficiency.

1 STANDARDS AND REGULATIONS

1.1 Warranty

The equipment is covered by warranty for 12 months running from delivery date from producer to final user, intended to be as first purchaser customer.

The validity of the warranty is certified by the purchase receipt and the label attached to equipment and reporting the cabinet serial number.

This documentation must be kept by customer and must be stated or shown if requests for interventions are made whilst under guarantee. If failure in showing these documentations or presentation of altered or illegible documentation occur, the warranty will not cover the goods any more.

The warranty does not cover any malfunctioning caused by transport by third parties, by incorrect installation and maintenance, by negligence or carelessness of use and tampering by third parties, by modifications made without previous authorization by equipment producer.

To obtain a technical intervention under guarantee, a written request must be sent to the Sales Direction or to the nearest dealer.

Clabo Group at their own discretion will decide whether to repair or replace the component or the entire appliance.

Clabo Group rule out any further responsibility also regarding direct and/or indirect damage. If the display cabinet is replaced the warranty period is not renewed or prolonged.

Clabo Group can decide if repair or change the components or the entire machine

1.2 Environmental notes

Packaging

Do not throw away the packaging but separate the different types of material (cardboard, wood, steel, polyester etc.) and dispose of them in compliance with the regulations in force in the country where the display cabinet is to be used.

Display cabinet out of service

At the end of the display cabinet's life span:

- Remove the refrigerant from the display cabinet refrigerant circuit.
- Empty all oil and remove all rubber parts (e.g. O-ring, gaskets)
- The display cabinet must be sent for destruction.

IMPORTANT INFORMATION FOR USERS ACCORDING TO ART.13 LEGISLATIVE DECREE JULY 25, NO. 151 "ACCOMPLISHMENT OF DIRECTIVES 2002/98/CE, 2002/90/CE AND 2003/108/CE, CONCERNING THE REDUCTION OF THE USE OF DANGEROUS SUBSTANCES IN ELECTRIC AND ELECTRONIC EQUIPMENT, AS WELL AS THE WASTE DISPOSAL".

The sign of the crossed bin on the equipment or on its packing indicates that the product must be gathered separate from other waste at the end of its life. The equipment waste disposal must be accomplished using the RAEE waste disposal centres specifically authorized. Users can contact their jobber/distributor/producer for information. The correct separate collection and subsequent recycling, treatment and the environment-friendly disposal of the equipment helps to prevent possible negative effects on the environment as well as health problems and promotes the re-employment and/or recycling of the equipment components. The product disposal without respecting the law implies the enforcement of administrative sanctions provided for by the rule in force.

1.3 Identification:

The SERIAL NUMBER on the plate positioned on the back (operator side) of the display cabinet (see fig.1) must be given when contacting the manufacturer or customer services.

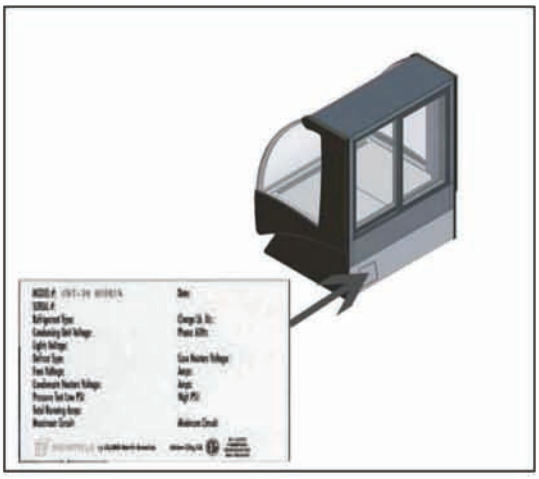

ATTENTION: Maintenance of the good conditions and legibility of the label applied to the cabinet is recommended. Don't tamper with the label.

2 TECHNICAL NOTES:

2.1 Description of the cabinet

The cabinet is essencially made up of four sections:

1. Glass Structure
2. Display Area
3. Frame
4. Cooling system

Here are the description in detalis:

1. The glass structure is made up of two side panels of insulated tempered glass. The front glass is made up of insulated tempered glass and it is enclosed in a metal frame which is hinged at the bottom for ease of cleaning. The top support frame includes the following components:
    a. Double glazed glass sliding doors
    b. Service shelf at room temperaure
    c. Refrigerated work and intermediate deck
    d. Product display light

ATTENTION: Be careful during the opening/closing of the sliding doors as it could be squash your hands.

2. The display area is highly insulated with high density polyurethane so it has a low coefficient of conductivity. In the display area there are the evaporators and the ventilator fans which cool and dry the air and gently circulate it throught the cabinet. In the interior is placed a bar which supports the rows of display pans. The pitch of the pans enhances the view of the display and allows for under storage of product depending on pan size used.

3. The frame structure is made of high quality, durable steel. In this structure all of the cabinets cooling, electrical and mechanical items are located for ease of service.

4. The cooling system is made up of:
    a. Condensing unit(s)
    b. Evaporator unit(s)

    The condensing unit includes the compressor and the condenser. This assembly is mounted on tracks or rails which can be slid out to aid in the ease of servicing. The evaporators include the evaporator assembly with its own fan motors which keep the required temperature for the products placed in the display area of the cabinet.

NOTE: Directly below the rear work surface is the machine identification data plate. This data plate includes all of the machines pertinent information for servicing, model number, serial number and should be referenced when initiating a service call.

2.2 Overall Dimensions

TYPE	P [mm]	L [mm]	L' [mm]	H [mm]	WEIGHT(Kg)
40"	895	1016	1088	1371	--
50"	895	1270	1342	1371	--
60"	895	1524	1596	1371	--

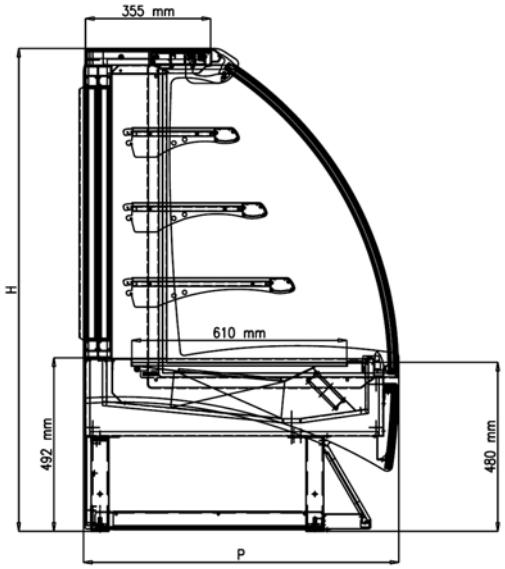

SERVICE CABINET Section

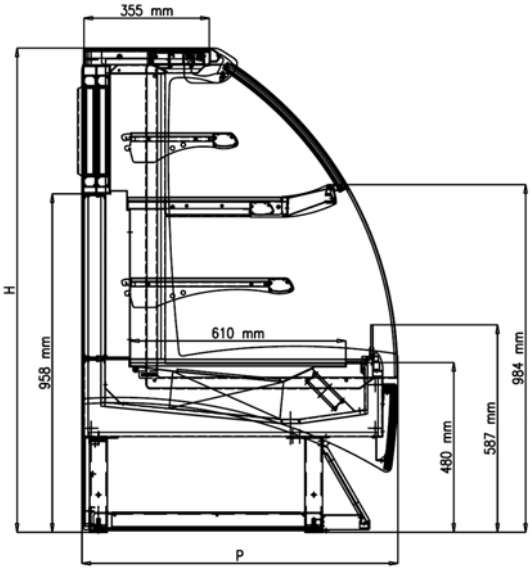

COMBI CABINET Section

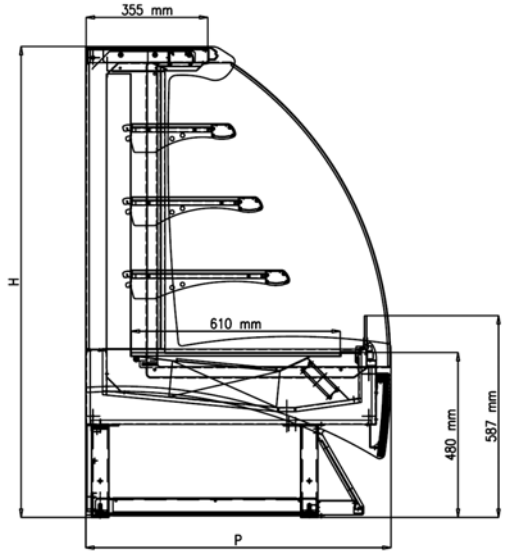

SELF CABINET SECTION

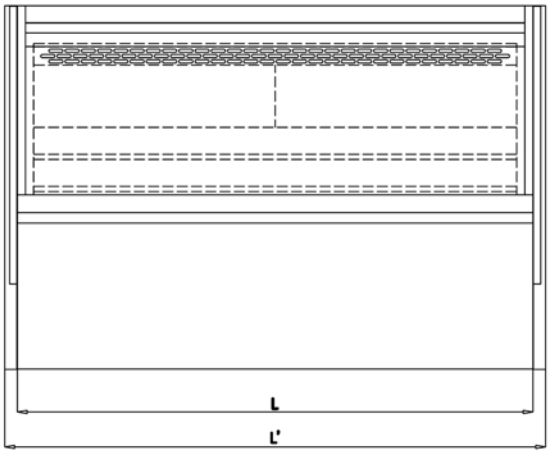

ITALIANA UPPER VIEW

2.3 Electrical Ratings

TYPE	SUPPLY*	POWER INPUT [W]	RATED CURRENT [A]
SELF 40”	230V – 1ph – 50Hz	1381	7.5
SELF 50’’	230V – 1ph – 50Hz	1421	7.7
SELF 60’’	230V – 1ph – 50Hz	1774	9.6
SELF A30	230V – 1ph – 50Hz	1147	6.2
SERVICE 40”	230V – 1ph – 50Hz	954	5.2
SERVICE 50’’	230V – 1ph – 50Hz	994	5.4
SERVICE 60’’	230V – 1ph – 50Hz	1173	6.4
SERVICE A30	230V – 1ph – 50Hz	1120	6.1
COMBI 40”	230V – 1ph – 50Hz	981	5.3
COMBI 50’’	230V – 1ph – 50Hz	1021	5.5
COMBI 60’’	230V – 1ph – 50Hz	1194	6.5

*Different Voltages available on request

3 RECEIPT AND INSTALLATION

ATTENTION: Before acceptance of the equipment, control the following:
- the package must be intact and the products haven’t to be damaged during transport.
- the shipped goods correspond to the order specifications
- the presence and integrity of accessories
- possible damages occurred on products must be reported on the transport document for
  the compensation by the transport agency

ATTENTION: This product must be installed by qualified personnel. During installation the operators involved must wear Individual Protection Devices

ATTENTION: The installation of Remote Condensing Units (where available), must be performed by qualified personnel, following the instruction reported on manual delivered with the condensing unit itself and supplied by the factory.

3.1 Packaging and Transportation

Before removing any of the protective packing materials from around the machine, carefully inspect for any damage. This MUST be noted on the freight bill if damage has occurred and a freight claim filed.

Two wooden rails are bolted to the bottom side of the machine frame structure of the cabinet. These wooden rails are in turn fastened to the main shipping skid or pallet, which holds the cabinet firmly in place during transportation. To remove the machine from the pallet, you must first remove these screws.

3.2 Handling and Lifting off of the Pallet

The display cabinet is lifted from the transport pallet in the following manner:

- Put the forks beside the machine as shown below.
- Ensuring that the forks are completely under the entire display cabinet and centered from side to side on the cabinet (see fig.1 below. You are now ready to lift off of the pallet.
- After removing from the pallet, place the display cabinet on the floor.
- To remove the wooden rails from the bottom, *CAREFULLY* lift and tip the display cabinet using the fork lit as illustrated in figure below.
- Unscrew the bolts which hold the rails to the bottom frame structure (fig.2 pos.A) and remove the rails from the supporting structure (fig.2 pos.B).
- Remove the other supporting structure and continue in the same way.

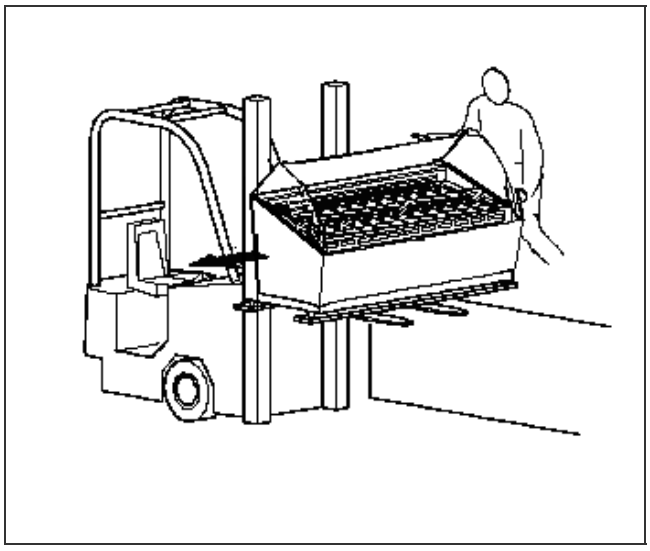

Fig. 1

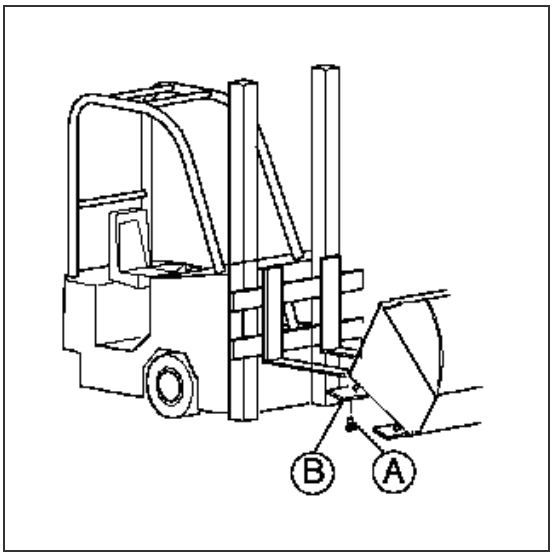

Fig. 2

ATTENTION: During the package wasting, using devices such as cutter could cause injuries to people or damages to product.
In addition, avoid to smear against the product with metallic parts such as watches, buckles, chains, rings and so on that could produces scratches.

The movement and placement of the display cabinet must now be done by hand once it has been placed on the floor. *NEVER* push or try to move the cabinet by pushing or pulling on any side of the glass structure.

3.3 Positioning

Before starting the installation, please ensure that the following clearances are maintained:

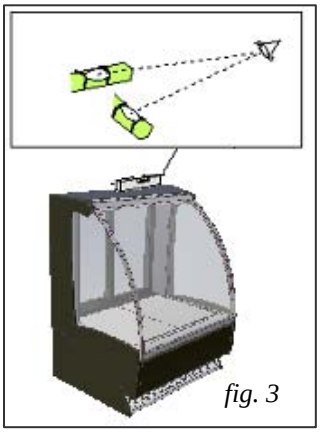
fig. 3

- Position the display cabinet leaving enough space for use and maintenance in safe conditions as envisioned by the UNIEN 292/2 Standard point 6.2.1 and in paragraph 2.6
- A minimum space of 3000 mm customer side, and 1000 mm operator side is maintained.
- Check that there is an appropriate power supply is provided according to the local and or national standards.
- Check that there is a suitable earth plant present envisioned by European Standards.
- After the final position is located, seal base of the cabinet with silicone sealant to the floor along the bottom frame rail.
- Using a level, precisely level the cabinet front to back, side to side as shown.

ATTENTION: Before positioning the cabinet, assure that the floor is suitable for supporting its weight.

3.4 Environmental Specifications

When the cabinet has been positioned, please take note that its operation is affected by environmental conditions such as temperature and relative humidity (RH). The temperature < 25° C (77 °F) and RH of < 55% should be maintained to ensure proper cabinet operating conditions.
During the installation we must also check that:

- There is a sufficient air circulation around the cabinet and that there are no direct air current that could affect correct air cir
- The cabinet is not situated near any heat sources
- The cabinet is not exposed to direct sunlight at any time
- The grill for the air condenser is not obstructed, and air is allowed to flow freely
- Air conditioning or heating in the room are not directed near the cabinet.

The above-mentioned indications must be respected to prevent malfunctioning, which will not be covered by the warranty.

3.5 Service of condensing units and under frame components

In the event that service is required, it might be necessary to remove the condensing unit(s) from the cabinet. To do so, the rear panel must be first removed and adequate space provided to slide them out of the rear of the cabinet (see fig.4). It is therefore necessary to have adequate space behind the cabinet for this process to take place.

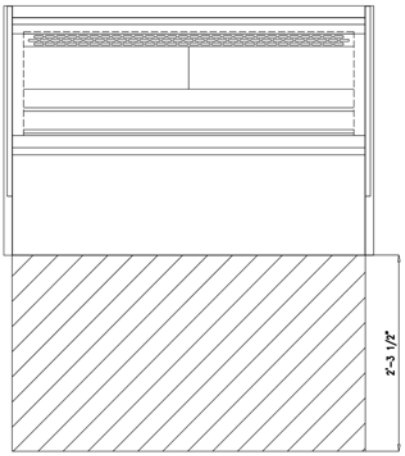

fig. 4

3.6 Electrical connections:

Before installation, check that a suitable earth plant is present as envisioned by the regulations in force in the country of sale. Check that the mains voltage is compatible with the features stated on the plate positioned on the operator side of the display cabinet.

Also check that the line upstream from the display cabinet is appropriately dimensioned to support the load of the display cabinet itself.

ATTENTION: Voltage fluctuation above 10% of the nominal voltage stated on the plate can cause permanent damage to the compressor and other electro-mechanical equipment. In this case they are not covered by the warranty.

Respect national regulations for electrical installations.
Position the master switch in the OFF position.
The display cabinet is supplied with a 5-wire cable;

- Yellow-green = Earth
- Blue = Neutral
- Brown = Phase 1
- Grey = Phase 2
- Black = Phase 3

ATTENTION: Never cut or remove the yellow-green cable mentioned above.

The five power supply wires must be connected to the back-bone network, which a san efficient earth system, in compliance with national and local regulations (where present) regarding electrical installations and suitable for the electric absorption of the display cabinet, refer to chapter 6 – Total Absorbed Power.

ATTENTION: The electrical connection to the mains must be made using the five wires supplied. Moreover, the central plant to which the display cabinet is connected must have a switch with contact opening of at least 3 mm protected by fuses.

ATTENTION: Apply a suitable method of fixing to the power supply cable on the connection box, making reference to the table shown below.

RATED CURRENT [A]	RATED SECTION [mm^2]	
	FLEXIBLE WIRES [mm^2]	GROUNDING WIRES [mm^2]
3	0,5 ÷ 0,75	1 ÷ 2,5
3 ÷ 6	0,75 ÷ 1	1 ÷ 2,5
6 ÷ 10	1 ÷ 1,5	1 ÷ 2,5
10 ÷ 16	1,5 ÷ 2,5	1,5 ÷ 4
16 ÷ 25	2,5 ÷ 4	2,5 ÷ 6
25 ÷ 32	4 ÷ 6	4 ÷ 10
32 ÷ 40	6 ÷ 10	6 ÷ 16
40 ÷ 63	10 ÷ 16	10 ÷ 25

4 FUNCTIONING

4.1 Start-up

1) Activate the main master switch.
2) Activate the display cabinet master switch, which is found on the rear protection panel. To introduce the electric power supply to the display cabinet, place the master switch at position “1” (fig. 5 pos. A).

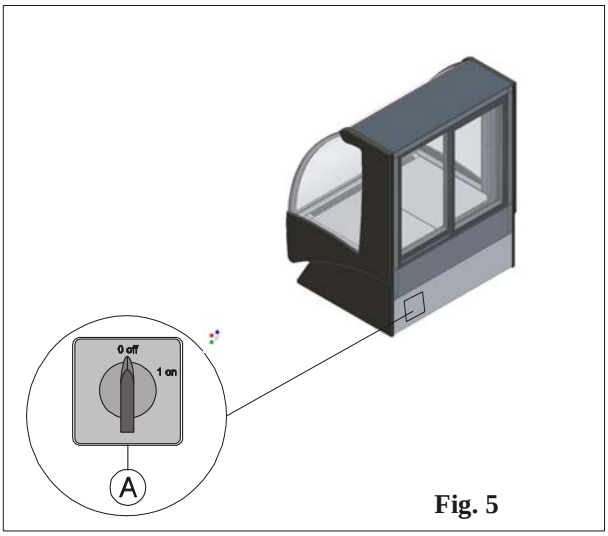

Fig. 5

4.2 Control Panel XW20L

To see or modify the Set-point. In programming mode it select a parameter or confirm a value. If pressed for 3s during the visualization of the Max or min temperature it reset that.

To see the maximum reached temperature. In programming mode it scrolls the parameters codes or increases the value. If pressed for 3s it allows fast-cooling cycle.

To see the minimum reached temperature. In programming mode it scrolls the parameters codes or decreases the value.

Holding it down for 3s it starts the manual defrosting cycle.

It switches ON and OFF the cabinet’s lights.

It switches ON and OFF the main control.

Key combination

To lock and unlock the keyboard

To enter the programming code

To exit the programming code

4.3 The meaning of the leds

There are a series of luminous points on the display, the meaning of which you will find in the table below:

LED	MODE	FUNCTION
❄	ON	The compressor is running
❄	FLASHING	Programming phase (flashing with LED ✣)
❄	ON	The defrost is enabled
❄	ON	Fast freezing cycle is enabled
☼	ON	The light is ON
(( ))	ON	Alarm signal - in “Pr2” indicates that the parameter is also present in “Pr1”

4.4 How to see the min temperature

1. Press and release the key.
2. The “Lo” message will be displayed followed by the minimum temperature recorded.
3. By pressing the key or waiting for 5s the normal display will be restored.

4.5 How to see the maximum temperature

1. Press and release the key
2. The “Hi” message will be displayed followed by the maximum temperature recorded.
3. By pressing the key or waiting for 5s the normal display will be restored.

4.6 How to reset the Max and min temperature recorded

1. To reset the stored temperature, when Max or min temperature is displayed:
2. Press SET key until “rST” label starts blinking

N.B.: After the installation RESET the temperature stored

4.7 How too see and modify the set-point

1. Push and immediately release the SET key: the display will show the Set-point value.
2. The SET LED start blinking
3. To change the Set value push the or arrows within 10s.
4. To memorize the new Set-point value push the SET key again or wait for 10s

4.8 To start a manual defrosting

Push the DEF key for more than 2s and a manual defrost will start.

4.9 The ON/OFF function

By pushing the ON/OFF the instrument shows “OFF” and the “ON/OFF” LED is switched OFF.
During the OFF status, all the relays are switched off and the regulations are stopped.

N.B. During the OFF status the Light button is active

4.10 Local alarms

MESSAGE	CAUSE	OUTPUTS
“ P1 ”	Thermostat probe failure	Alarm output ON; compressor output according to parameters “Con” and “Cof”
“ HA “	Maximum temperature alarm	Outputs unchanged
“ LA “	Minimum temperature alarm	Outputs unchanged
“ EE ”	Data or memory failure	

4.11 Automatic defrosting

The display cabinet is complete with an automatic “compressor-pause” defrosting system that allows for rapid elimination of ice formations on the evaporator fins. The automatic defrosting process is set in the standard configuration every 8 hours.

4.12 Stopping the Machine

To stop the plant act on switch (A), which is found behind the rear protection panel. Position the master switch at “0” (fig. 5 pos. A) disconnecting the display cabinet power supply.

5 MAINTENANCE AND CLEANING

ATTENTION: All maintenance operations must be performed by expert qualified personnel.
Before performing any maintenance operation be sure that the cabinet is disconnected from electrical supply.
Wait until hot parts have cooled down and reached ambient temperature to avoid burning risk.
Wear suitable gloves during maintenance and cleaning operations to avoid contact with metallic parts which could cause injuries.

5.1 Preliminary

Before carrying out any maintenance or cleaning the electric power supply must be disconnected by deactivating the plant master switch regarding the room where the display cabinet is positioned.

5.2 Condenser cleaning

The dust and dirt deposits, generally situated on the fins of the air condenser, reduces the efficiency of the system and could eventually prevent it from functioning. It may also cause compressor damage if not cleaned regularly, so it is absolutely necessary to clean the condenser periodically (every 30 days). To do so, proceed as follows:

- Disconnect the power supply
- Removing the rear panel.
- Remove the dust and the dirt in the condenser fins using a brush or a vacuum cleaner with a soft brush attachment (see fig. 6).
- Put the rear panel back in place.
- Reconnect power to the machine.

fig. 4

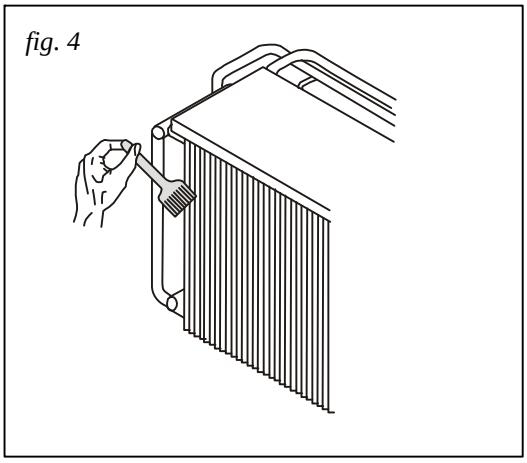

ATTENTION: During condenser cleaning operations don't use rigid or metallic objects that could damage it.

5.3 General Clenaing:

Steel / Wooden / Plastic / Marble and Chromium-plate surfaces: Clean using a sponge or damp cloth, using water and/or neutral detergents, rinse and dry using a soft cloth.
Glass surfaces: Clean using a sponge or damp cloth, using water and/or neutral detergents, rinse and dry using a soft cloth.

ATTENTION: During cleaning operation don't use too much water because it could overflow from the collecting-water tank and flood the floor.

ATTENTION: Use of abrasive, corrosive products, solvents , acids that could cause irreparable damages on surface and start corrosion must be avoided.
Don’t pour flammable products on hot parts such as lamps, LEDs, ballasts and so on.
Don’t pour water on electric components such as fan motors, lights and so on..

ATTENTION: During cleaning operations of movable glasses, be careful in opening and closing the glass, accompanying it until its final position. Avoid to lean on the open glass during cleaning phases.

6 PRACTICAL TROUBLESHOOTING GUIDE

1) The temperature of the display area is not low enough.

LIKELY CAUSE	LIKELY REMEDY
Evaporator obstructed by ice.	Carry out defrosting as indicated. Turn off the main switch for 10 /12 hours so as to allow for the evaporator area to defrost (point 4.5).
Condenser obstructed by dust or other matter.	Clean the condenser as indicated in point 4.2 Remove everything that prevents a regular airflow to the condenser.
The ventilators are not working and / or their blades are damaged.	Request the intervention of the assistance service for the replacement of the same.
The display cabinet is exposed to air currents or direct sunlight	The display cabinet will not function correctly in these conditions; Remove the display cabinet from the air currents and / or direct sunlight
The thermostat is not working properly. With a perfectly functional refrigerating plant, the thermostat maintains a higher temperature in the air than that set.	Call the technical assistance service.
Lack of water	Check if there is a water flow, if there is, call the technician for possible water valve rupture, pressure switch problems or other causes.

2) The defrosting water does not drain off properly (that is, the water obtained during the automatic or manual defrosting phases).

LIKELY CAUSE	LIKELY REMEDY
The defrosting water drainage tube that goes from the cold tub to the tub in which such water is channelled (for evaporation) is blocked.	Open up the drainage tube
The display cabinet is positioned on the ground in such a way that the drainage water is not directed towards the outlet hole.	Ensure that the display cabinet is level on the ground as outlined in point 2.2. It must be completely level.

3) The compressor never stops or it works for very long periods of time.

LIKELY CAUSE	LIKELY REMEDY
The room temperature is very high (e.g. above +28°C).	If it is not possible to lower the room temperature (e.g. by means of air conditioning) the compressor will work almost constantly.
The air condenser is blocked	Clean the condenser as outlined in point 4.2
The thermostat is set too low.	Regulate the thermostat to a higher temperature as indicated in point 3.8
The ventilators are off.	Call the assistance service to individualise the cause and replace them if necessary.

4) The display cabinet does not work

LIKELY CAUSE	LIKELY REMEDY
The cabinet is not plugged in.	Plug it in
The trip switch has gone off.	Reinsert the trip switch.
The general switch of the display cabinet is off.	Turn on the general switch of the display cabinet (see point 3.1)

5) The light is not working

LIKELY CAUSE	LIKELY REMEDY
The light switch is not turned on.	Turn on the light switch
The fluorescent light bulb is not inserted properly.	Insert the light bulb properly.
The light bulb is blown.	Replace the light bulb

7 Electrical Scheme (Standard Version 230-1-50)

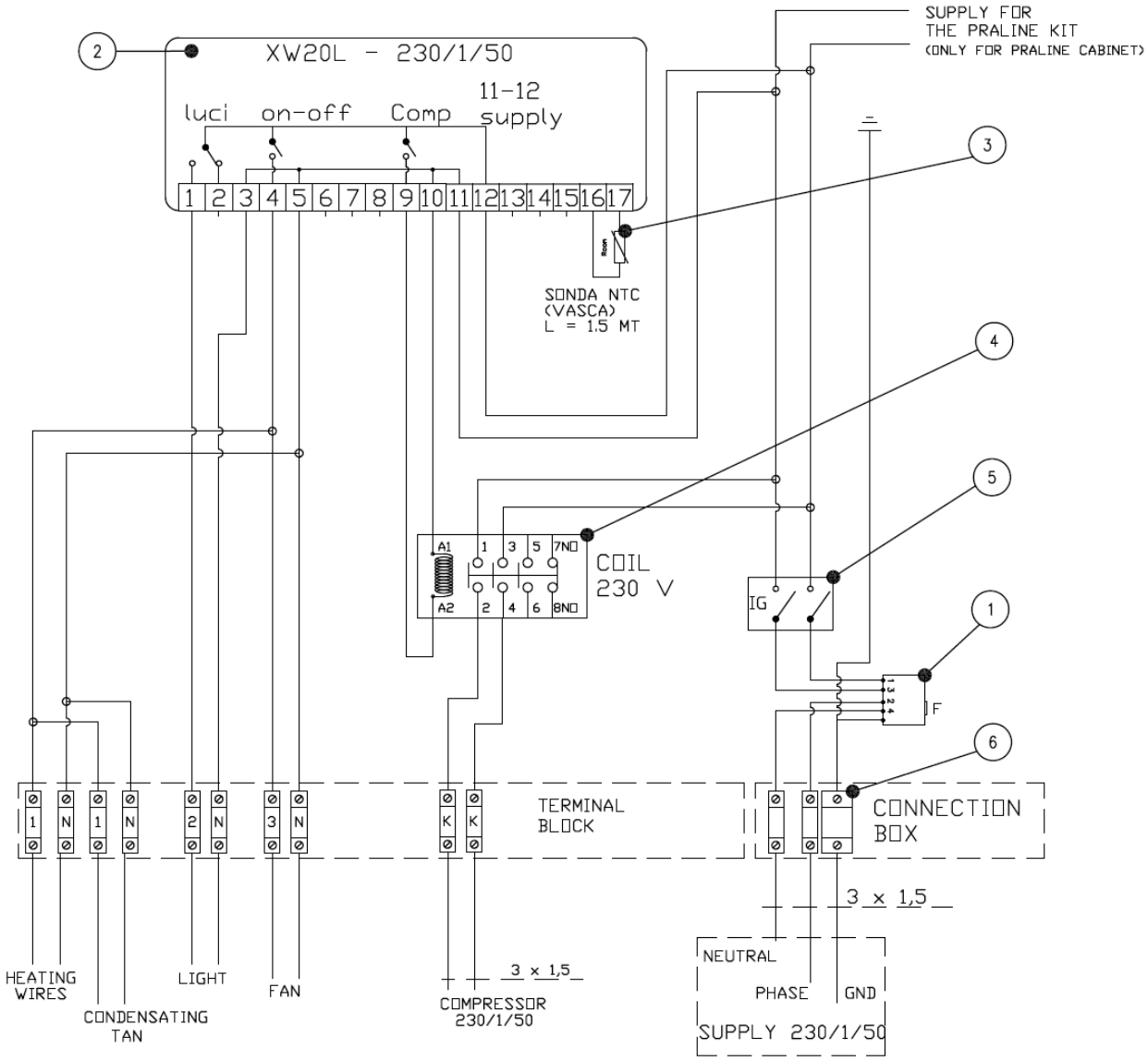

N.	Description
1	Noise Protection Filter
2	Dixell Control Board XW20L – 230V-1ph.-50/60Hz
3	NTC Temperature Probe
4	Compressor Contactor
5	Main Switch
6	Terminal Block

8 Lights Connections

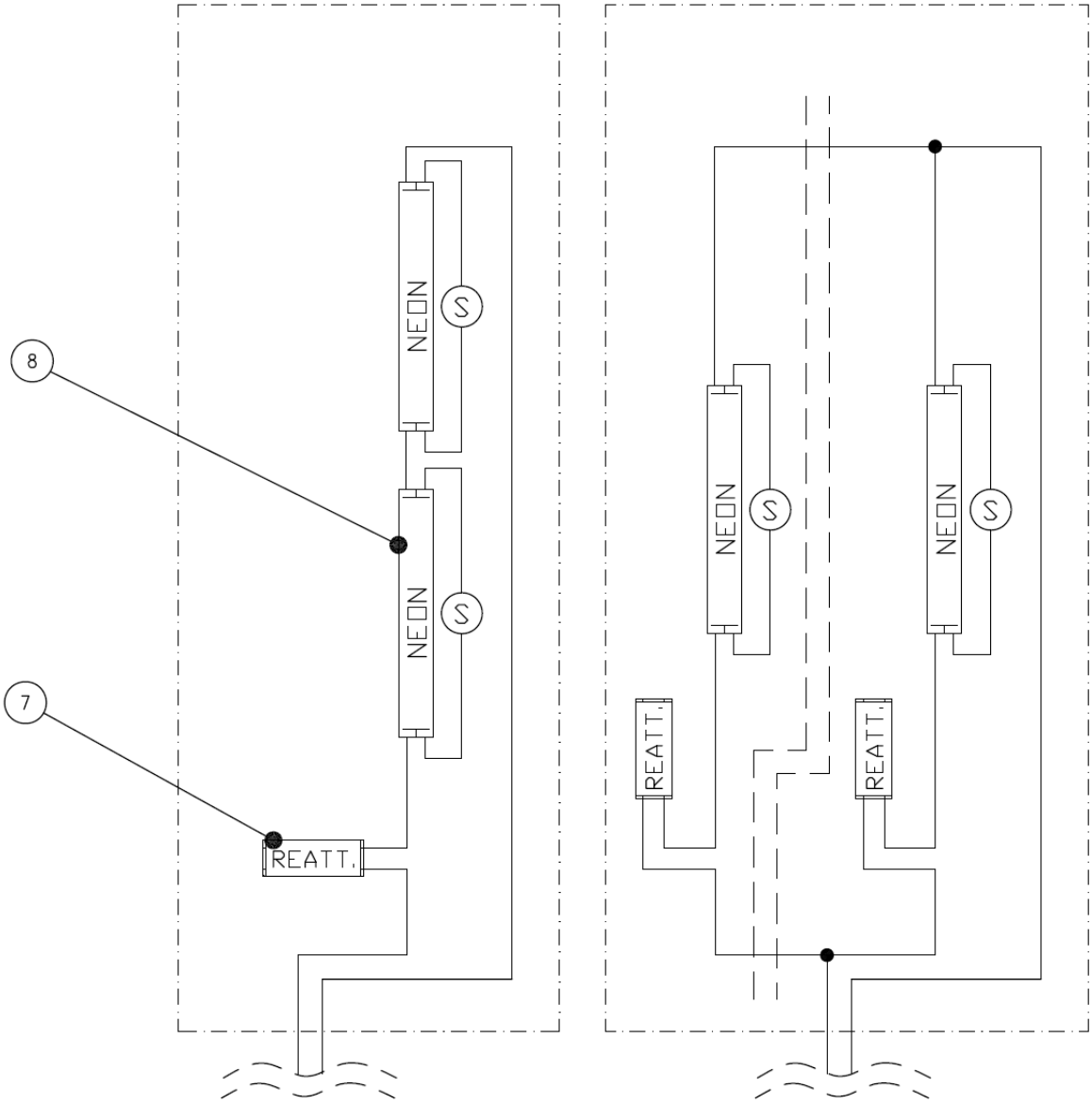

N.	Description
7	Ballast
8	Fluorescent Tube

9 Refrigerating System

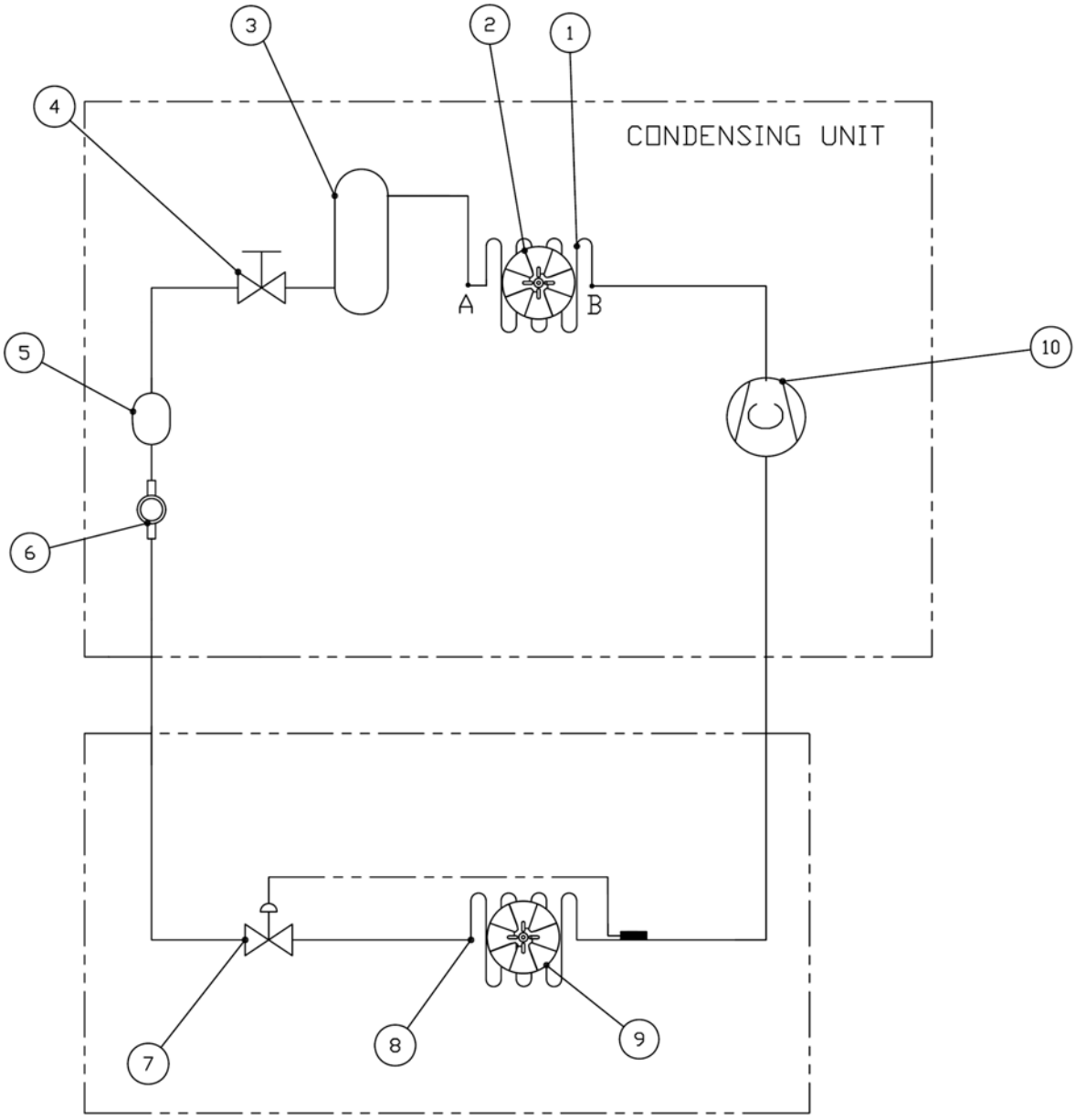

N.	Description
1	Condenser
2	Condenser fan
3	Liquid receiver
4	Refrigerant ball valve
5	Filter
6	Spy glass (optional)
7	Thermostatic valve
8	Evaporator
9	Evaporator fan
10	Compressor

CLABO
USA INC.

2556 Barrington Court | Hayward, CA 94545
Tel: 1.800.672.2784 | 510.441.0441 | Fax: 510.441.0401
www.clabona.com | www.otl-usa.com E-mail: sales@clabona.com

CLABO
GROUP Spa

60035 JESI (An) Italy - ZIPA –Viale dell'Industria
Tel. +39 0731 61531 – Fax +39 0731 6153413
www.clabogroup.com - E-mail: info@clabogroup.com