CLABO GROUP Spa

VENTURA XP II
(TECNICA)

WARM CS-CBM CABINET

USER MANUAL AND MAINTENANCE

Index

1 NORMS AND REGULATIONS 15
1.1 Guarantee norms: 15
1.2 Environmental notes: 15
1.3 Identification: 15
2 INSTALLATION 16
2.1 Lifting and Movement: 16
2.2 Positioning: 16
2.3 Environmental Specifications: 17
2.4 Electrical Connection: 17
3 FUNCTIONING 18
3.1 Start-up: 18
3.2 Command Console: 18
3.3 Keyboard 18
3.4 The meaning of the leds 18
3.5 How to visualise and change the set point 19
3.6 The ON/OFF Function 19
3.7 Local Alarms 19
3.8 Stopping the Machine: 19
4 MAINTENANCE 20
4.1 Preliminary Operations: 20
4.2 General Cleaning: 20
5 ELECTRICAL DIAGRAMS 21

DEAR CUSTOMER

To guarantee the safety of the operator, please ensure that all of the component devices of this display cabinet are in constant working order. The aim of this handbook is to illustrate how to use and maintain the display cabinet, the operator is therefore obliged to follow such guidelines and is responsible for adherence to such.

1 NORMS AND REGULATIONS

1.1 Guarantee norms:

The validity of the guarantee is certified by the tax document and by the label stuck to the card that is enclosed with the product, which contains the bar and alphanumerical codes.
Such documentation will have to be stored by the client and referred to or exhibited in cases of intervention requests during the guarantee period.
Possible damage caused due to transport by third parties, incorrect installation and maintenance, negligence or neglect in use or tampering by third parties will not be covered by guarantee.
A written request will have to be sent to the Sales Management Division or to the local agent to obtain a technical intervention during the guarantee period.
According to its own unquestionable judgement **Clabo Group** will decide whether it is necessary to repair or replace the components or the entire piece of equipment.
Clabo Group will not accept any ulterior / different responsibility and this includes direct and / or indirect damages. Cases of replacement of the equipment will not lead to extension or renewal of the guarantee conditions.

1.2 Environmental notes:

- **Packaging**
  Do not throw away of part of the display cabinet packaging but separate it according to the type of material in question (cardboard, wood, steel, polyester, etc…) and dispose of it according to the current laws in vigour in the country of use.
- **End of service of display cabinet**
  When the display cabinet has reached the end of its life span:
  - Remove the refrigerant from the refrigerator circuit of the display cabinet.
  - Empty it of all of the oil it contains and remove all of the rubber parts (e.g. O-ring, rubber trimming).
  - Send it off to be scrapped.

1.3 Identification:

When communicating with the manufacturer or the assistance centres always quote the MATRICULATION NUMBER of the display cabinet, which is situated on the plate fixed to the rear (operator's side) of the counter (fig.1).

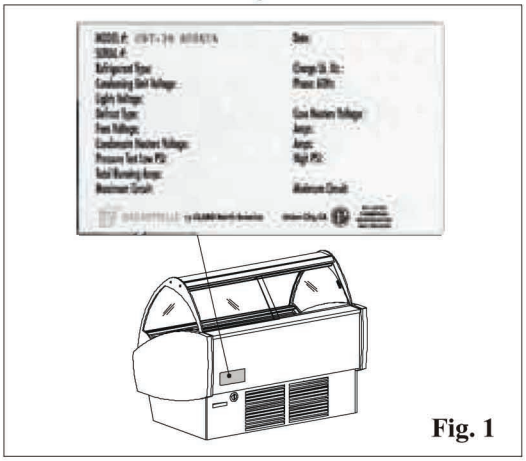

Fig. 1

2 INSTALLATION

This product must be installed by qualified personnel.

2.1 Lifting and Movement:

The product is to lifted by a transport vehicle using transport pallets, in the following manner:

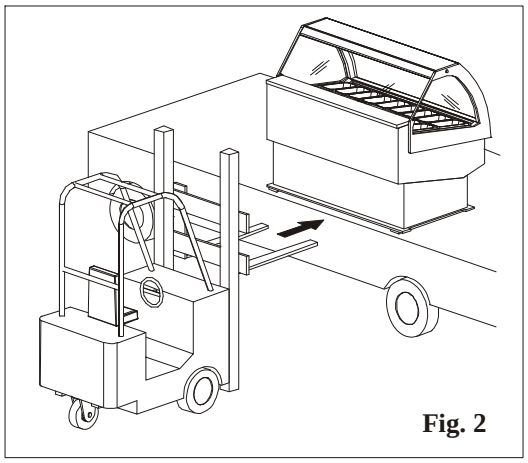

Fig. 2

- Position the forks at the level of the vehicle (e.g. lorry).
- Move forward with the transport pallet so as to insert the forks under the cabinet.
- Ensure that the cabinet is perfectly balanced on the forks before lifting it (fig.2).

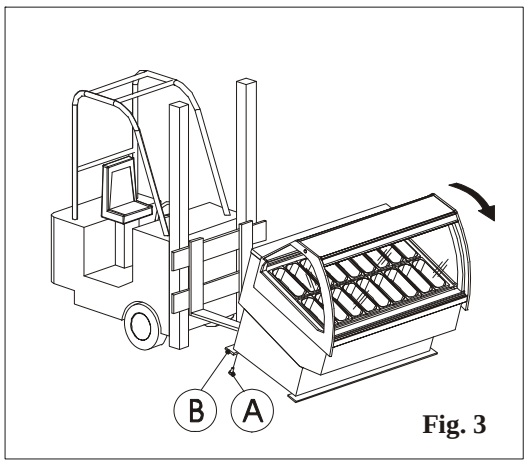

Fig. 3

- Position the cabinet on the ground.
- Lift the cabinet using the pallets as shown in figure 3.
- Unscrew the screws that anchor the lists to the base (fig.3 pos. A) and remove the base (fig.3 pos. B).

Proceed in the same way to remove the other base.

The cabinet must be moved manually when on the ground.

2.2 Positioning:

Please carry out the following operations to ensure correct positioning:

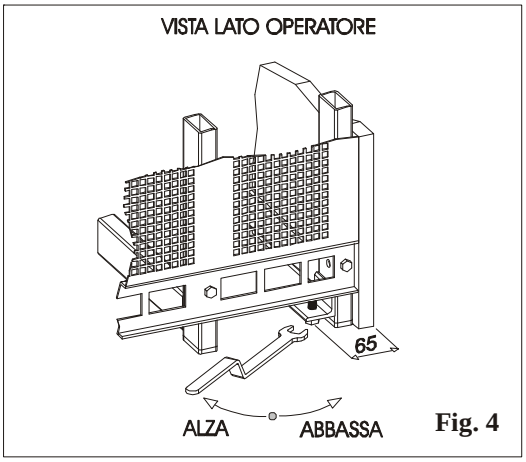

Fig. 4

- Position the cabinet in such a way as to leave sufficient space for use and maintenance in conditions of safety as foreseen by the UNIEN 292/2 norm point 6.2.1 and in paragraph 2.5
- Ensure the existence of a suitable earthing plant as foreseen by the European Norms.
- Once the cabinet is placed in the desidered area, it must be put horizontally through the adjustable feets. (fig.4)

2.3 Environmental Specifications:

When positioning the display cabinet remember to consider that its correct operational activity is guaranteed in temperature conditions of < 30°C and relative humidity of < 55%.
Please also ensure that:

- It is not exposed to direct sunlight;
- The air conditioning or heating in the environment where the cabinet is positioned is not focused directly on the cabinet.

It is essential to respect the aforementioned conditions in order to avoid malfunctions, which will not be covered by guarantee.

2.4 Electrical Connection:

Please ensure that there is a suitable earthing plant before installation, as outlined by the current norms in the country of sale. Check that the network tension is compatible with the characteristics outlined on the plate situated on the operator's side of the display cabinet (see fig.1 pag. 3). Also check to ensure that the line to which the cabinet is connected is of the correct dimensions to support the load of the cabinet itself.

WARNING! Fluctuations in tension greater than 10% of the nominal tension indicated on the plate may cause permanent damage to the compressor and to the other pieces of electro-mechanical equipment that will not be covered by guarantee.

Respect any national regulations for electrical installations.
Position the general plant switch to OFF.
The display cabinet is supplied with a cable with three wires;
Yellow – Green = Earth
Blue = Neutral
Brown = Phase

WARNING! Never cut or remove the aforementioned yellow-green cable for any reason.

The three supply cables must be connected to the main network, which must be equipped with an efficient earthing network, in accordance with the national and local norms (where existent) for electrical installations and they must be suitable for the electrical absorption of the display cabinet. Please refer to the table in chapter 6 – Total Power Absorption column.

WARNING! The electrical connection to the network must be carried out by means of the three wires included, the central plant to which the cabinet is connected must also have a switch with contact openings measuring at least 3mm and protected by fuses.

WARNING! Apply an adequate anchoring method to the supply cable in the connection box, making reference to the table outlined below.

NOMINAL CURRENT OF THE APPLIANCE [A]	NOMINAL SECTION [mm^2]	
	FLEXIBLE CABLES [mm^2]	CABLES FOR EARTHING [mm^2]
3	0,5 ÷ 0,75	1 ÷ 2,5
3 ÷ 6	0,75 ÷ 1	1 ÷ 2,5
6 ÷ 10	1 ÷ 1,5	1 ÷ 2,5
10 ÷ 16	1,5 ÷ 2,5	1,5 ÷ 4
16 ÷ 25	2,5 ÷ 4	2,5 ÷ 6
25 ÷ 32	4 ÷ 6	4 ÷ 10
32 ÷ 40	6 ÷ 10	6 ÷ 16
40 ÷ 63	10 ÷ 16	10 ÷ 25

3 FUNCTIONING

3.1 Start-up:

1) Operate the central electrical equipment's main switch.
2) Operate the showcase's main switch behind the back protection board. Remove the fixing screws from the back board, as shown in picture 7 position B, and set the main switch on the "1" position (picture 7 position A) by activating the showcase's electrical power supply.

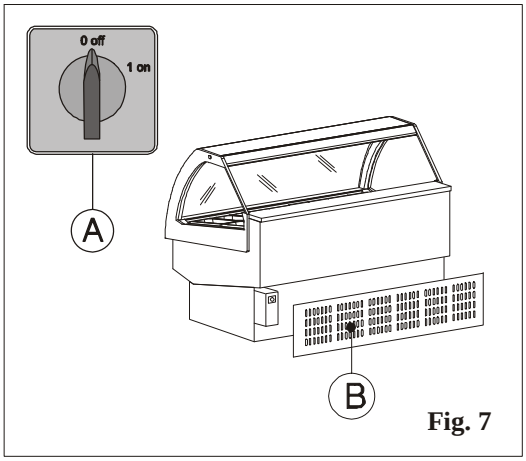

Fig. 7

3.2 Command Console:

The refrigerating plant of the display cabinet is controlled by means of an electronic console.
The electronic console consists of:
1) a command console
2) a display

3.3 Keyboard

T640: tastiera orizzontale a 8 tasti (185x38mm).

To visualise or change the set point. When programming this button is used to select a parameter or to confirm a value.

This button is used during programming for going through the parameter codes or for increasing their value.

This button is used during programming for going through the parameter codes or decreasing their value.

Use this button to turn the display cabinet lights on and off.

Turn the instrument on and off.

3.4 The meaning of the leds

There are a series of luminous points on the display, the meaning of which you will find in the table below:

LED	MODE	Function
❄	ON	Heating ON
❄	FLASHING	Programming phase (flashing with LED ✣)
(!)	ON	ALARM SIGNAL - In the "Pr2" programme it indicates that the parameter is also present in "Pr1"

3.5 How to visualise and change the set point

1. Press the SET key and release it to see the set point: you will visualise the set point immediately.
2. To change the set point press the SET key and keep it pressed for 3 seconds: the led will flash ❄ ;
3. To change the value activate ▼ and ▲ .
4. To memorise the new set point, press the SET key or wait 15 seconds to exit the programming feature.

3.6 The ON/OFF Function

By pressing the **ON/OFF** key the instrument will show "OFF".
In this configuration the loads of all of the regulations will be deactivated. To turn the instrument back ON press the **ON/OFF** key again.
The OFF condition allows for the exclusion of the instrument from monitoring without generating any type of alarm.

N.B. The LIGHT key remains active in the OFF position.

3.7 Local Alarms

MESSAGE	CAUSE	STATE OF OUTPUTS
" P1 "	Thermostat probe failure	Output according to " Con " and " COF " parameters
" HA "	High temperature alarm	Unchanged
" LA "	Low temperature alarm	Unchanged
" EE "	Memory anomaly	
" EAL "	Digital input alarm	Unchanged
" BAL "	Blockage alarm from digital input	Regulation outputs deactivated
" rtc "	Clock alarm	Unchanged

3.8 Stopping the Machine:

To stop the machine completely, activate the switch (A) that is situated behind the back protection panel. By removing fixing screws of the back motor panel (as shown in picture 8 pos. B) it is possible to turn the main switch to "0" position (see picture 8 pos. A), thus disconnecting power supply to cabinet.

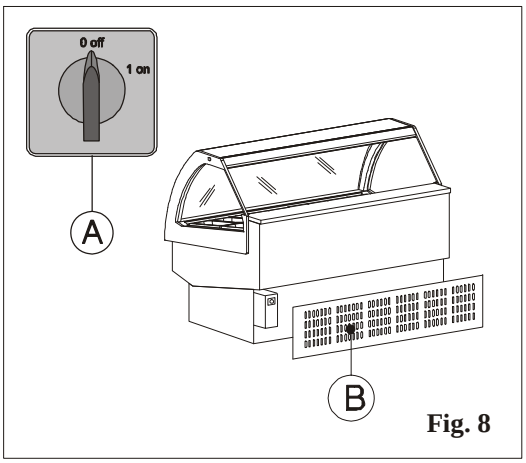

Fig. 8

4 MAINTENANCE

4.1 Preliminary Operations:

Before carrying out any preliminary maintenance or cleaning operations you must disconnect the electricity supply by turning off the general plant switch in the room where the display cabinet is situated.

4.2 General Cleaning:

- **Stainless steel surfaces:** Clean with a sponge or a damp cloth using water and a neutral detergent, rinse and dry off with a soft cloth.

- **Wooden surfaces:** Clean with a sponge or a damp cloth using water and a neutral detergent, rinse and dry off with a soft cloth.

- **Glass surfaces:** Clean with a sponge or a damp cloth using water and a neutral detergent, rinse and dry off with a soft cloth.

5 ELECTRICAL DIAGRAMS

The following electrical diagrams will have to be used by qualified personnel on the basis of the current regulations in vigour in the country of sale.

ELECTRICAL DIAGRAM TCBM

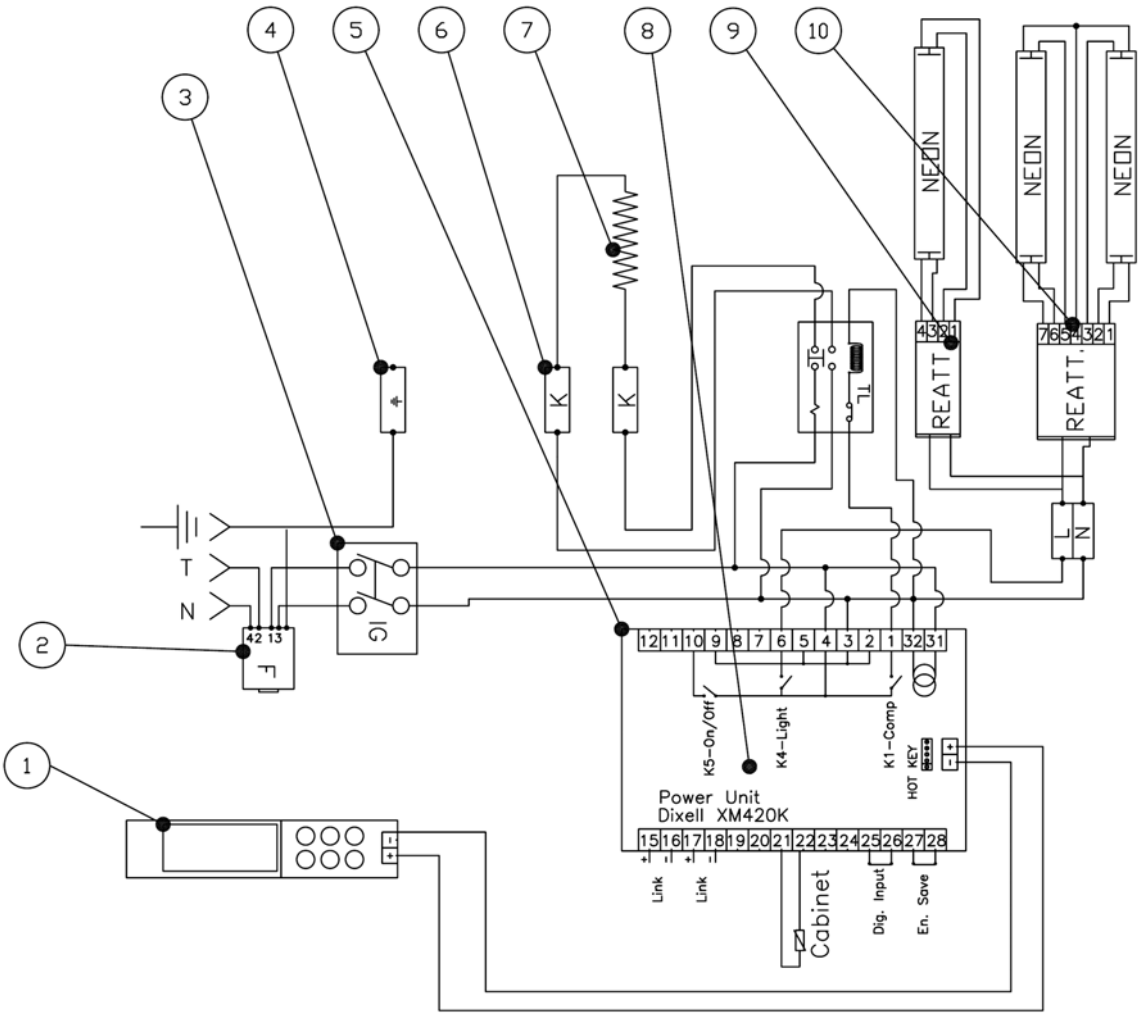

Pos.	Code	Description	Q.ty
1	20258200146	Keyboard T640	1
2	20308101005	Noise filter	1
3	20370202927	Switch A48x48	1
4	41015281206	Gnd terminal mmq 6 1PH0	1
5	20258200107	Slave XM420K	1
6	41015281510	Terminal board mmq4	10
7		Heating wire	1
8	41005442230	Temperature probe NTC	1
9		Ballast Quicktronic 1*	A
10		Ballast Quicktronic 2*	A

ELECTRICAL DIAGRAM TCS

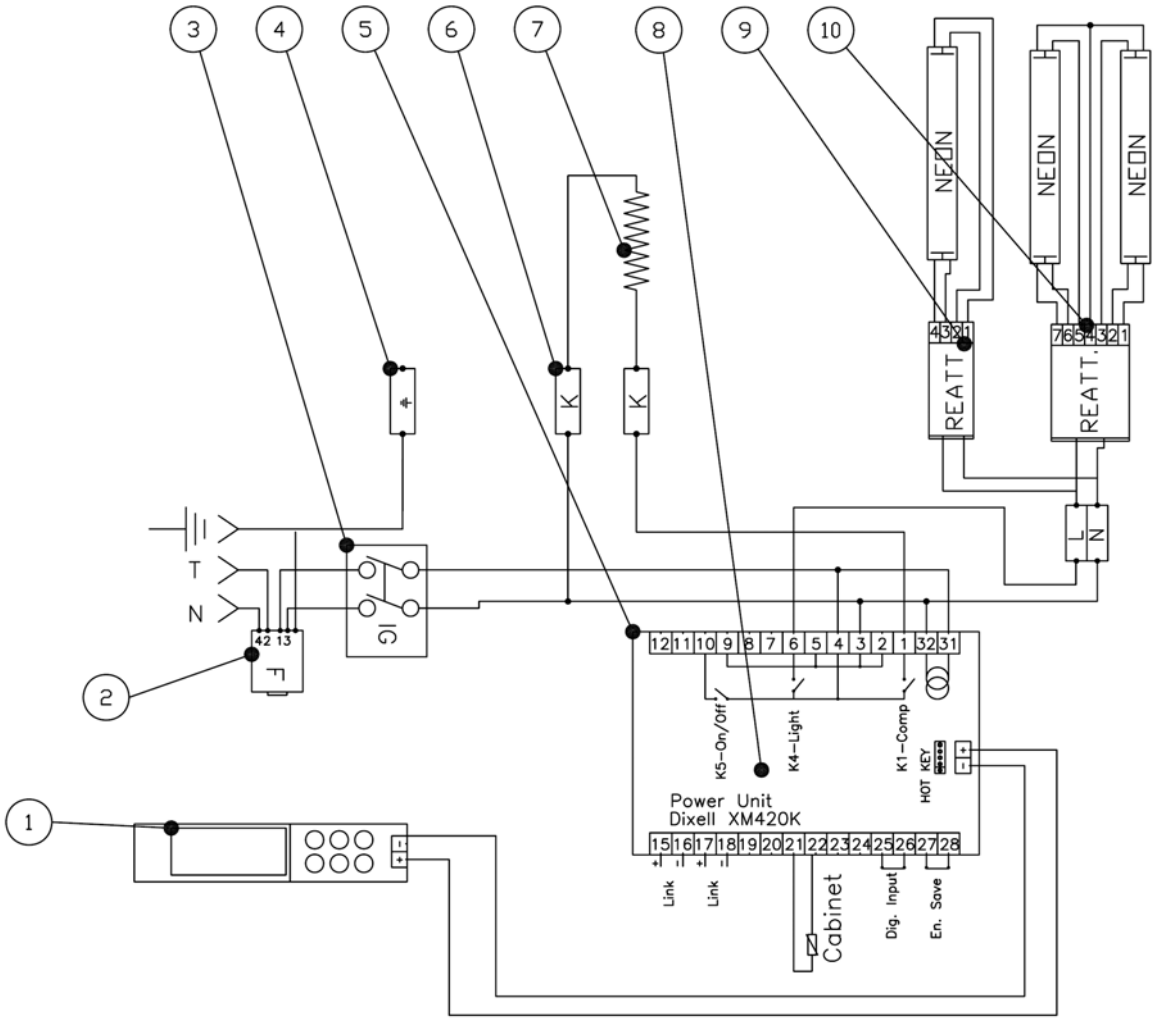

Pos.	Code	Description	Q.ty
1	20258200146	Keyboard T640	1
2	20308101005	Noise filter	1
3	20370202927	Switch A48x48	1
4	41015281206	Gnd terminal mmq 6 1PH0	1
5	20258200107	Slave XM420K	1
6	41015281510	Terminal board mmq4	10
7		Heating wire	1
8	41005442230	Temperature probe NTC	1
9		Ballast Quicktronic 1*	A
10		Ballast Quicktronic 2*	A

7. ELECTRICAL DIAGRAMS

7.1 ELECTRICAL DIAGRAM "HOT DRY" CS

Std Ver. 230-1-50

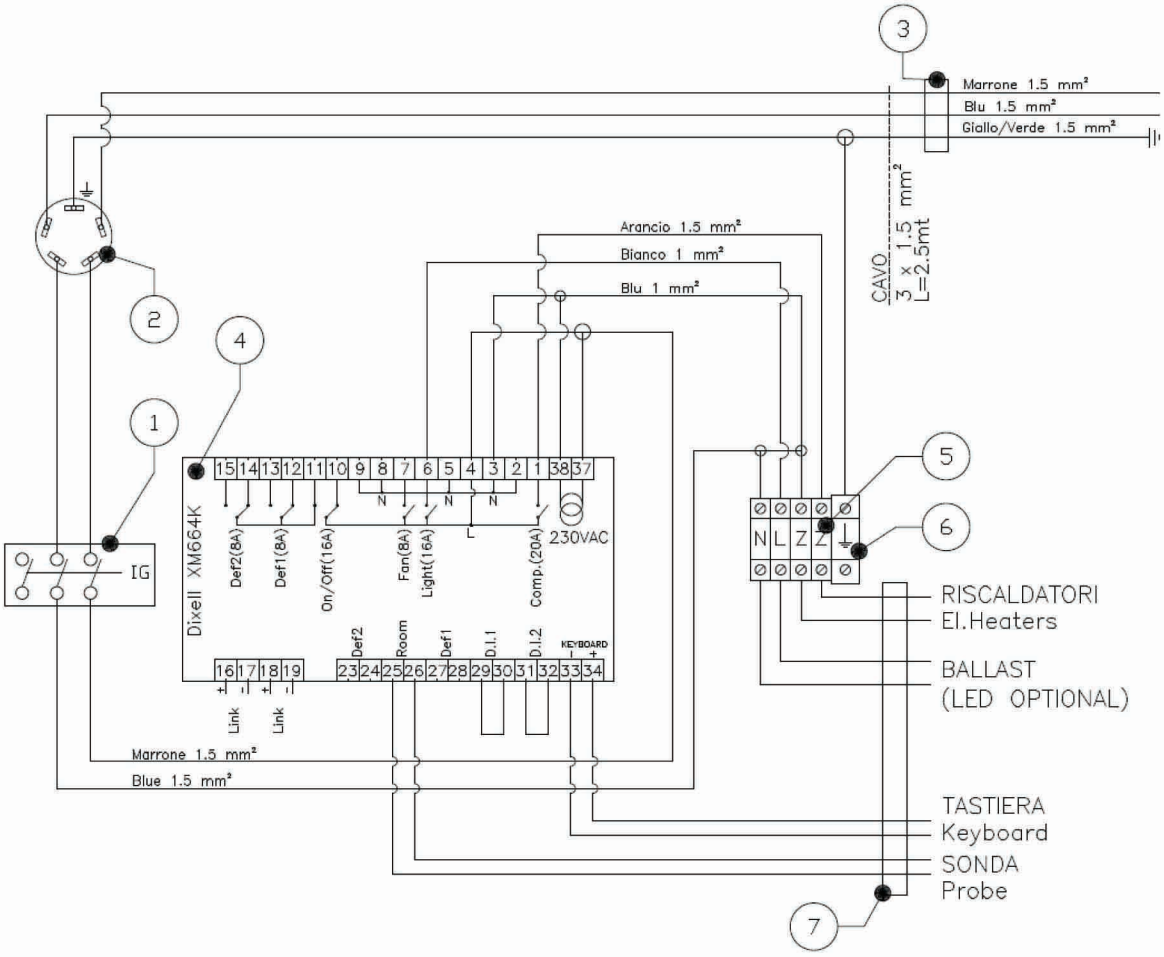

n.	Description
1	Main Switch
2	EMC Noise Filter
3	Cable Holder
4	Control Board XM664K
5	Terminal Clamps
6	Ground terminal clamps
7	Cable plastic passage

7.2 ELECTRICAL DIAGRAM CBM

Std Ver. 230-1-50

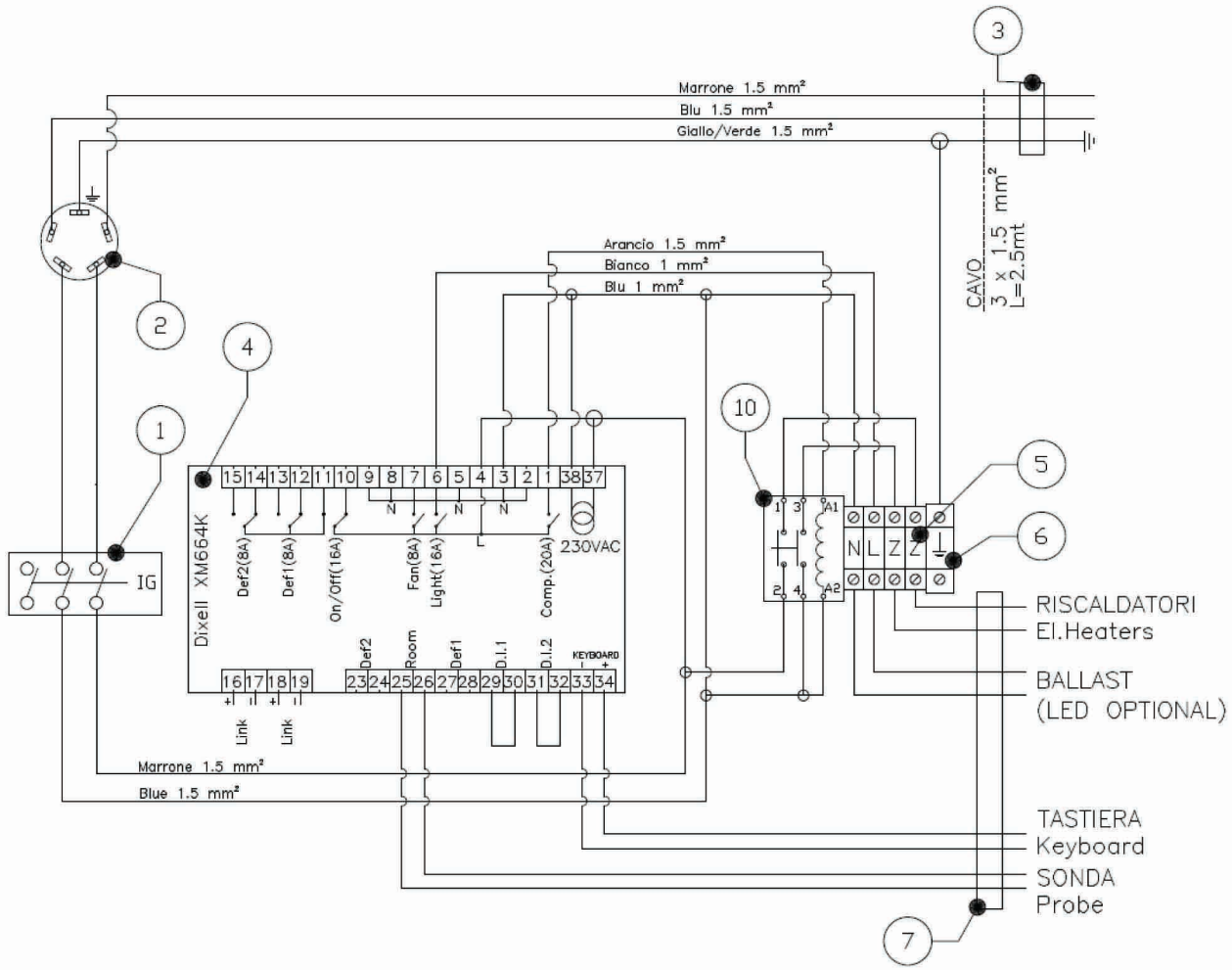

n.	Description
1	Main Switch
2	EMC Noise Filter
3	Cable Holder
4	Control Board XM664K
5	Terminal Clamps
6	Ground terminal clamps
7	Cable plastic passage
10	Telemecanique Contactor

CLABO North America LLC

33300 Central Avenue | Union City, CA 94587
Tel: 1.800.672.2784 | 510.441.0441 | Fax: 510.441.0401
www.clabona.com | www.otl-usa.com | E-mail: sales@clabona.com

CLABO GROUP Spa

60035 JESI (An) Italy - ZIPA –Viale dell'Industria
Tel. +39 0731 61531 – Fax +39 0731 6153413
www.clabogroup.com - E-mail: info@clabogroup.com

CLABO GROUP Spa

011

HOT CASES

OPERATION MANUAL

WELLS BUILT-IN WARMERS with THERMOSTAT CONTROL

including Autofill, Drain and Drain/Manifold Models

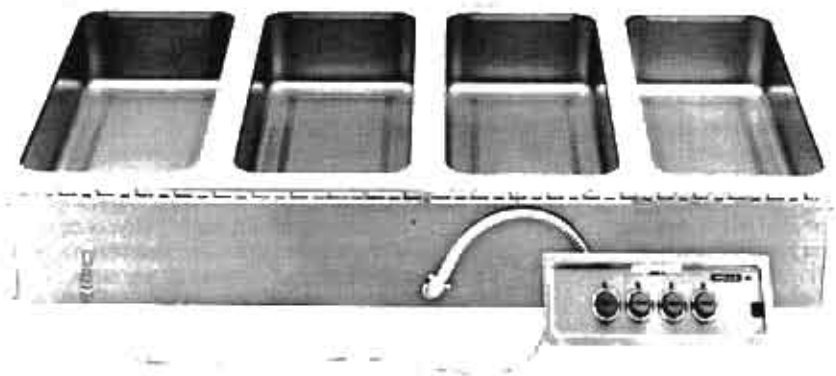

Model MOD-427TDMAF

Includes INSTALLATION USE & CARE

IMPORTANT: DO NOT DISCARD THIS MANUAL

This manual is considered to be part of the appliance and is to be given to the OWNER or MANAGER of the restaurant, or to the person responsible for TRAINING OPERATORS of this appliance. Additional manuals are available from your WELLS DEALER.

THIS MANUAL MUST BE READ AND UNDERSTOOD BY ALL PERSONS USING OR INSTALLING THIS APPLIANCE. Contact your WELLS DEALER if you have any questions concerning installation, operation or maintenance of this equipment.

PRINTED IN UNITED STATES OF AMERICA

p/n ***303308*** *Rev. E ECN-03352*

M011 ***07****0913 cps*

LIMITED WARRANTY STATEMENT

Unless otherwise specified, all commercial cooking equipment manufactured by WELLS BLOOMFIELD, LLC is warranted against defects in materials and workmanship for a period of one year from the date of original installation or 18 months from the date of shipment from our factory, whichever comes first, and is for the benefit of the original purchaser only.

THIS WARRANTY IS THE COMPLETE AND ONLY WARRANTY, EXPRESSED OR IMPLIED IN LAW OR IN FACT, INCLUDING BUT NOT LIMITED TO, WARRANTIES OF MERCHANTABILITY OR FITNESS FOR ANY PARTICULAR PURPOSE, AND/OR FOR DIRECT, INDIRECT OR CONSEQUENTIAL DAMAGES IN CONNECTION WITH WELLS BLOOMFIELD PRODUCTS.

This warranty is void if it is determined that, upon inspection by an authorized service agency, the equipment has been modified, misused, misapplied, improperly installed, or damaged in transit or by fire, flood or act of God. It also does not apply if the serial nameplate has been removed, or if service is performed by unauthorized personnel. The prices charged by Wells Bloomfield for its products are based upon the limitations in this warranty. Seller's obligation under this warranty is limited to the repair of defects without charge by a Wells Bloomfield factory authorized service agency or one of its sub-service agencies. This service will be provided on customer's premises for non-portable models. Portable models (a device with a cord and plug) must be taken or shipped to the closest authorized service agency, transportation charges prepaid, for service. In addition to restrictions contained in this warranty, specific limitations are shown in the Service Policy and Procedure Guide. Wells Bloomfield authorized service agencies are located in principal cities. This warranty is valid in the United States and Canada and void elsewhere. Please consult your classified telephone directory, your foodservice equipment dealer or contact:

Service Department, Wells Bloomfield, LLC
P.O. Box 280, Verdi, Nevada 89439
phone (775) 689-5700 or (888) 492-2782

for information and other details concerning warranty.

SERVICE POLICY AND PROCEDURE GUIDE and ADDITIONAL WARRANTY EXCLUSIONS

1. Resetting of safety thermostats, circuit breakers, over load protectors, and/or fuse replacements are **not** covered by this warranty unless warranted conditions are the cause.
2. All problems due to operation at **voltages or phase other than specified on equipment nameplates** are **not** covered by this warranty. Conversion to correct voltage and/or phase must be the customer's responsibility.
3. All problems due to **electrical connections not made in accordance with electrical code requirements and wiring diagrams** supplied with the equipment are **not** covered by this warranty.
4. Replacement of items **subject to normal wear**, to include such items as knobs, light bulbs; and, normal maintenance functions including adjustments of thermostats, adjustment of micro switches and replacement of fuses and indicating lights are **not** covered by warranty.
5. Damage to electrical cords and/or plug due to exposure to excessive heat are **not** covered by this warranty.
6. Full use, care, and maintenance instructions supplied with each machine. Noted maintenance and preventative maintenance items, such as servicing and cleaning schedules, are customer responsibility. Those miscellaneous adjustments noted are customer responsibility. Proper attention to preventative maintenance and scheduled maintenance procedures will prolong the life of the appliance.
7. Travel mileage is limited to **sixty (60) miles** from an Authorized Service Agency or one of its sub-service agencies.
8. All labor shall be performed during regular working hours. Overtime premium will be charged to the buyer.
9. All genuine Wells replacement parts are warranted for ninety (90) days from date of purchase on non-warranty equipment. This parts warranty is limited only to replacement of the defective part(s). **Any** use of **non-genuine** Wells parts completely **voids any warranty.**
10. Installation, labor, and job check-outs are **not** considered warranty and are thus **not** covered by this warranty.
11. Charges incurred by delays, waiting time or operating restrictions that hinder the service technician's ability to perform service are **not** covered by warranty. This includes institutional and correctional facilities.

SHIPPING DAMAGE CLAIM PROCEDURE

NOTE: For your protection, please note that equipment in this shipment was carefully inspected and packaged by skilled personnel before leaving the factory. Upon acceptance of this shipment, the transportation company assumes full responsibility for its safe delivery.

IF SHIPMENT ARRIVES DAMAGED:

1. **VISIBLE LOSS OR DAMAGE:** Be certain that any visible loss or damage is noted on the freight bill or express receipt, and that the note of loss or damage is signed by the delivery person.
2. **FILE CLAIM FOR DAMAGE IMMEDIATELY:** Regardless of the extent of the damage.
3. **CONCEALED LOSS OR DAMAGE:** If damage is unnoticed until the merchandise is unpacked, notify the transportation company or carrier immediately, and file "CONCEALED DAMAGE" claim with them. This should be done within fifteen (15) days from the date the delivery was made to you. Be sure to retain the container for inspection

Wells Bloomfield cannot assume liability for damage or loss incurred in transit. We will, however, at your request, supply you with the necessary documents to support your claim.

TABLE OF CONTENTS

WARRANTY	xi
FEATURES & OPERATING CONTROLS	2
PRECAUTIONS & GENERAL INFORMATION	3
AGENCY LISTING INFORMATION	3
INSTALLATION	4
OPERATION	6
CLEANING INSTRUCTIONS	8
TROUBLESHOOTING SUGGESTIONS	10
MAINTENANCE INSTRUCTIONS	11
PARTS & SERVICE	12
CUSTOMER SERVICE DATA	13

INTRODUCTION

Thank You for purchasing this Wells Bloomfield appliance.

Proper installation, professional operation and consistent maintenance of this appliance will ensure that it gives you the very best performance and a long, economical service life.

This manual contains the information needed to properly install this appliance, and to use and care for the appliance in a manner which will ensure its optimum performance.

APPLICABILITY

This manual applies to the following Wells models:

Half-Size Warmers	HMP-6, HMP-6D, HMP-6ULD HSW-6, HSW-6D
Bottom Mount Warmers	BMW-206RT, BMW-206RTD, BMW-206ST, BMW-206STD, BMW-206ULRT, BMW-206ULRTD, BMW-206ULST, BMW-206ULSTD SS-206ET, SS-206ETD
Modular Warmers	MOD-100T, MOD-100TD, MOD-100TDAF MOD-200T, MOD-200TD, MOD-200TDM, MOD-200TDMAF MOD-300T, MOD-300TD, MOD-300TDM, MOD-300TDMAF MOD-327TDM, MOD-327TDMAF MOD-400T, MOD-400TD, MOD-400TDM, MOD-400TDMAF MOD-427TDM, MOD-427TDMAF MOD-500T, MOD-500TD, MOD-500TDM, MOD-500TDMAF MOD-527TDM, MOD-527TDMAF
Round Well Warmers	SS-4ULT, SS-4ULTD SS-8T, SS-8TD, SS-8ULT, SS-8ULTD SS-10T, SS-10TD, SS-10ULT, SS-10ULTD
Top Mount Warmers	SS-206T, SS-206TD, SS-206ULT, SS-206ULTD SS-276ULT, SS-276ULTD

011 303306 OpManual for Built-In T'Stat Warmers

FEATURES & OPERATING CONTROLS (continued)

A. THERMOSTAT

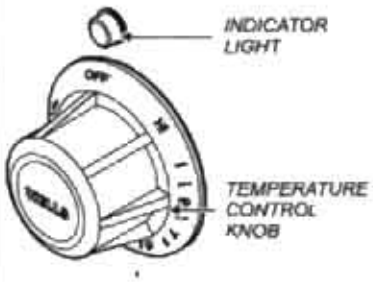

1. On THERMOSTATICALLY CONTROLLED warmers, power is applied to the heating element according to the control knob position and the actual temperature at the temperature sensing thermobulb.
2. The desired temperature is controlled by rotating the TEMPERATURE CONTROL KNOB. The knob has a numeric scale, where higher numbers correspond to higher temperature.
3. On warmers equipped with an INDICATOR LIGHT, the light will glow when the thermostat is calling for heat (i.e. the element is energized).
4. The TEMPERATURE CONTROL KNOB will rotate approximately 300°, and will reach a "stop" at both ends. The *OFF* position is marked.

NOTE: The dial position is an indication of the temperature setting. Actual temperature will vary depending upon the type of product and food consistency.

B. MOUNTING

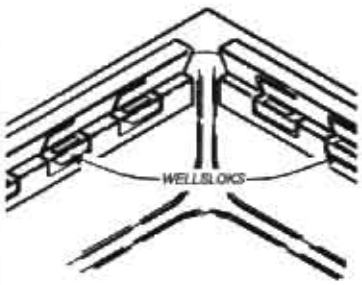

1. Top-mounted built-in warmers may be equipped with WELLSLOKS, uniquely designed turnout tabs which help secure the warmer top flange to the countertop.
2. Bottom-mounted warmers require that the cutout be flanged to provide a mounting means.
3. See the *Installation Instructions*, supplied with the particular appliance, for details.

C. DRAINS

1. Suffix "D" units (e.g. MOD-300TD) have drains for each pan, with each pan having an individual drain valve.
2. Suffix "DM" units (e.g. MOD-300TDM) have the individual drain lines manifolded together, with a single drain valve for the entire manifold.

D. AUTOFILL

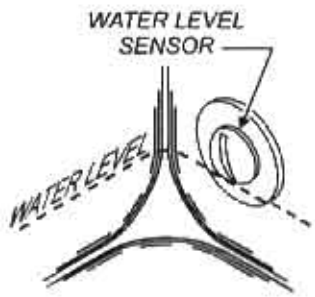

1. On AUTOFILL units, water level is automatically fed into the "master" pan whenever that pan's thermostat is *ON*.
2. Water level is sensed by a WATER LEVEL PROBE in the "master" pan.
3. Other pans are automatically filled via the drain manifold.

PRECAUTIONS AND GENERAL INFORMATION

This appliance is intended for use in commercial establishments only.

This appliance is intended to hold pre-heated food for human consumption. No other use is recommended or authorized by the manufacturer or its agents.

Operators of this appliance must be familiar with the appliance use, limitations and associated restrictions. Operating instructions must be read and understood by all persons using or installing this appliance.

Cleanliness of this appliance is essential to good sanitation. Read and follow all included cleaning instructions and schedules to ensure the safety of the food product.

Disconnect this appliance from electrical power before performing any maintenance or servicing.

This appliance is not jet stream approved. Do not direct water jet or steam jet at this appliance, or at any control panel or wiring. Do not splash or pour water on, in or over any controls, control panel or wiring.

Exposed surfaces of this appliance can be hot to the touch and may cause burns.

Do not operate this appliance if the control panel is damaged. Call your Authorized Wells Service Agent for service.

The technical content of this manual, including any wiring diagrams, schematics, parts breakdown illustrations and/or adjustment procedures, is intended for use by qualified technical personnel.

Any procedure which requires the use of tools must be performed by a qualified technician.

This manual is considered to be a permanent part of the appliance. This manual and all supplied instructions, diagrams, schematics, parts breakdown illustrations, notices and labels must remain with the appliance if it is sold or moved to another location.

This appliance is made in the USA. Unless otherwise noted, this appliance has American sizes on all hardware.

WARNING: Electric Shock hazard

All servicing requiring access to non-insulated electrical components must be performed by a factory authorized technician. DO NOT open any access panel which requires the use of tools. Failure to follow this warning can result in severe electrical shock.

CAUTION: Risk of Damage

DO NOT connect or energize this appliance until all installation instructions are read and followed. Damage to the appliance will result if these instructions are not followed.

CAUTION: Hot Surface

Exposed surfaces can be hot to the touch and may cause burns.

AGENCY LISTING INFORMATION

Refer to the *product nameplate* for the specific appliance for agency listings. In general:

This appliance conforms to NSF Standard 4 for sanitation only if installed in accordance with the supplied *Installation Instructions*.

UL Listed warmers are UL Listed under UL File E6070.

Underwriters Laboratory recognized (UL) warmers (UL File E6070) - Since the warmer is only a single component of a complete installation, the finished installation of an UL unit requires additional evaluations to Underwriters Laboratory standards.

NSF STD 4

UL E6070

UL Listed Warmers

UL E6070

UL Recognized Warmers

011 303308 OpManual for Built-In T'Stat Warmers

INSTALLATION

NOTE: DO NOT discard the carton or other packing materials until you have inspected the appliance for hidden damage and tested it for proper operation. Refer to *SHIPPING DAMAGE CLAIM PROCEDURE* on the inside front cover of this manual.

WARNING: RISK OF PERSONAL INJURY

Installation procedures must be performed by a qualified technician with full knowledge of all applicable electrical and plumbing codes. Failure can result in personal injury and property damage.

CAUTION
FIRE HAZARD

Avoid storing flammable or combustible materials in, on or near the appliance.

IMPORTANT: For warmers installed in plastic counter tops, the counter material must be protected from the heat of the warmer in order to prevent discoloration and/or deterioration. Wellsloks are not suitable for this purpose. The installer should contact the manufacturer or distributor of the countertop material for specific instructions.

IMPORTANT: Wellslok Extension Kits must be used ONLY with UL Listed warmers approved for installation in wood counter tops. Refer to the *Installation Instructions* provided with the warmer.

UNPACKING & INSPECTION

Carefully remove the appliance from the carton. Remove all protective plastic film, packing materials and accessories from the Appliance before connecting electrical power or otherwise performing any installation procedure.

Carefully read all instructions in this manual and the *Installation Instruction Sheet* packed with the appliance before starting any installation.

Read and understand all labels and diagrams attached to the appliance.

Carefully account for all components and accessories before discarding packing materials. Store all accessories in a convenient place for later use.

INSTALLATION NOTES

1. Installation and start up of built-in warmers MUST be performed by an authorized installation company.
2. It is the RESPONSIBILITY OF THE INSTALLER to verify that this warmer installation is in compliance with the specifications listed in this manual and on the specification sheet provided.
3. It is the RESPONSIBILITY OF THE INSTALLER to check with the AUTHORITY HAVING JURISDICTION, in order to verify that this warmer installation is in compliance with local code requirements.
4. Water supply and drain installation must meet all applicable local, state and federal plumbing codes and ordinances.
5. Refer to *Installation Instructions* included with the warmer for Underwriters Laboratories conditions of acceptability, electrical requirements and other installation concerns.

BUILT-IN WARMERS

1. This is a GENERAL GUIDE. For specific cutout dimensions and other installation details, refer to the *Installation Instructions* supplied with the warmer.
2. Cutout dimensions for warmer units and control panels are listed on the *Installation Instructions* provided with the warmer.
3. Verify style of control panel (e.g square, rectangular) before making cutout.

NOTE: Cutout dimensions are different for square and rectangular control panels, for UL LISTED units and UL Recognized units, and for wood and metal counters. Verify the dimensions are correct for the installation before making the cutout.

4. For "bottom-mounted" warmers (i.e. warmers mounted to a formed flange from underneath the counter top), apply a bead of food-grade silicone sealant to the top inside lip of the pan prior to attaching to the counter flange.

5. For "top-mounted" warmers (i.e. warmers mounted from above the counter top):
   a. Verify that provided sealants are applied to the underside of the warmer top flange prior to setting the unit into the cutout.
   b. After installation, verify that the tabs on the Wellsloks are turned out to lock the warmer into the counter.
   c. Apply a thin bead of food-grade silicone sealant around the flange to seal it to the counter.
   d. Wellslok extension kits are available for installing warmers in counter tops where the standard Wellslok would not normally reach. The extension kit will adapt to counter tops up to 1¾" thick.

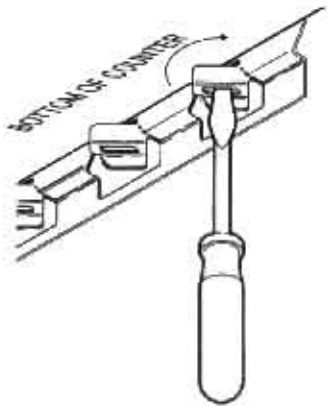

NOTE: Damage caused by leaks due to improper installation is NOT covered by warranty.

ELECTRICAL INSTALLATION

1. Refer to the product nameplate. Verify the electrical service power. Voltage and phase must match the nameplate specifications. Wiring the warmer to the wrong voltage can severely damage the unit or cause noticeably decreased performance.
2. Available electrical service amperage must meet or exceed the specifications listed on the specification sheet provided with the warmer.
3. Warmer and control unit must be connected to an appropriate building ground. Ground connection will be marked "GND" or " ⏚ ".

NOTE: Wire gauge, insulation type and temperature rating , as well as type, size and construction of conduit, must meet or exceed applicable specifications of local codes and of the National Electrical Code.

CAUTION:
ELECTRIC SHOCK HAZARD

The ground lug of this appliance must be connected to a suitable building ground.

IMPORTANT:
Contact a licensed electrician to install and connect electrical power to the appliance.

IMPORTANT:
Damage due to being connected to the wrong voltage or phase is NOT covered by warranty.

IMPORTANT: Electrical installation other than as specified on the specification sheet will void the UL listing, and may void the warranty.

E. PLUMBING INSTALLATION

For use in the State of Massachusetts, this appliance must be installed in compliance with ***Massachusetts Fuel Gas and Plumbing Code CMR 248.***

1. **IMPORTANT:** All plumbing installations must be performed by a qualified plumber.
2. For units equipped with a DRAIN LINE: Some jurisdictions may require an approved air gap or other back-flow prevention device in the drain. It is the responsibility of the plumber to determine such requirement, to provide and properly install the required device.
3. For SS-4, SS-8 and SS-10 drainline units, the drain must be attached with a ***union*** at the drain line fitting. This is necessary to provide for future maintenance of the heating element.
4. For AUTOFILL units: Some jurisdictions may require an approved back-flow preventer in the water supply line. It is the responsibility of the plumber to determine such requirement, and to provide and properly install the required device. Autofill supply must be connected to a COLD WATER line only.

NOTE: Plumb connections must be made in compliance with all Federal, State and Local Plumbing Codes and Ordinances.

OPERATION

CAUTION:
Hot Surface

Exposed surfaces can be hot to the touch and may cause burns.

CAUTION:
Electrical Shock Hazard

DO NOT splash or pour water onto control panel or wiring.

Always use an inset. **DO NOT** place food directly into the warmer.

Always pour hot water into the warmer before it is preheated. **DO NOT** pour water into a dry, heated warmer. This may damage the unit.

DO NOT put ice into a warmer pan. This will cause condensation on the inside of the warmer. Damage caused by condensation is ***NOT*** covered by warranty.

Stir thick food items frequently to keep food heated uniformly.

Keep insets covered to maintain food quality and temperature.

WET OR DRY OPERATION for WARMERS

1. Carefully read the description of the warmer operation on the specification sheet.
2. a. Most warmers are designed for *WET OR DRY* operation.
   b. Warmers may be used *wet*, or may be used *dry*. However warmers may **NOT** be used *wet-to-dry* or *dry-to-wet* unless they have been allowed to cool to room temperature between the change in wet or dry operation.
   c. Wells Manufacturing recommends operating WET for consistent food heating.
   d. If your wet-operation warmer is allowed to run dry, turn it OFF and allow to cool to room temperature before adding water.
3. If the warmer is to be used for *WET* operation, add approximately 1" of hot tap water before turning the warmer *ON*. Use of hot water will allow a faster preheat.
   a. Check the water level frequently and add hot water as necessary to prevent the warmer from running dry. Do not add water to the warmer if it has run dry.
   b. If your wet-operation warmer is allowed to run dry, turn it OFF and allow to cool to room temperature before adding water.
4. Damage caused by allowing a wet-operation warmer to run dry, is **NOT** covered by warranty. Damage caused by adding water to a dry warmer when hot is **NOT** covered by warranty.

PRE-HEATING THE WARMER

1. Place desired pan(s) or inset(s) with appropriate adapter top on warmer.
   a. Insets are available as accessories in 2½ qt., 4qt., 7 qt., and 11 qt. sizes with lids and adapter tops.
   b. For dry operation, a 6" deep pan or inset is recommended.
2. Turn temperature control to HI or highest temperature setting.
3. Allow warmer to preheat for approximately 30 minutes, then set the control for the desired temperature. Be sure to keep the warmer covered during preheat and operation.

OPERATION

1. Always use an inset. **DO NOT** place food directly into the warmer.
2. Check water level in wet-operation warmer frequently during use. Running warmers dry will lower the temperature of the food in the insert pan, and may damage the warmer.
3. Alternating between wet and dry operation in any individual warmer is ***NOT*** recommended.
4. **DO NOT** use metal tools, steel wool, or caustic or abrasive cleanser to clean warmer pan.

WARMERS WITH MANIFOLDED DRAIN

1. Manifolded warmers have a single drain valve.
2. Water poured into any one section will seek the same water level with all sections on the manifold.
3. Make sure the drain valve is fully closed before filling warmer.

AUTOFILL WARMERS

1. Autofill warmers sense water level by a sensor placed at the proper level. For manifolded autofill warmers, the water level sensor / fill tube is in one pan only, normally in the far left pan.
2. Water fills the pan through an inlet tube. For manifolded autofill warmers, the fill tube is normally in the far left pan. All other sections fill at the same time through the drain manifold.
3. The autofill function is active only when the thermostat for the pan with the water level sensor is turned *ON*
4. Make sure the drain valve is fully closed before turning any thermostats *ON*.
5. The autofill function is only activated when the far left thermostat is turned *ON*. For manifolded autofill warmers, be sure to turn far left thermostats *ON* before turning any other control *ON*, to avoid heating a dry pan.
6. DO NOT use autofill warmers in the dry mode. This may damage the water level sensor probe. NEVER turn the thermostat *ON* for the pan with the probe and fill tube unless the entire warmer unit is to be used in the wet mode.
7. Clean water level sensor daily to maintain water level in warmer.

DO NOT use autofill warmers in the dry mode. This may damage the water level sensor. NEVER turn the thermostat *ON* for the pan with the sensor and fill tube unless the entire warmer unit is to be used in the wet mode.

CLEANING INSTRUCTIONS

CAUTION
ELECTRIC SHOCK HAZARD

Do NOT splash or pour water into or over any control panel or wiring.

DAILY CLEANING INSTRUCTIONS

PREPARATIONS: Turn control knob(s) to OFF. Allow warmer to cool before proceeding.
Remove any insets, pans and/or adapter tops (if used). Drain or remove water from well if used for wet operation.

FREQUENCY: Minimum - daily.

TOOLS: Mild Detergent
Solution: 10 Parts Warm Water to 4 Parts Vinegar
Plastic Scouring Pad
Clean Cloth or Sponge
Food-Grade Silicone Sealant

1. Wipe entire unit down using a clean cloth or sponge and mild detergent. Carefully wipe any debris and residue from the water level sensor (auto-fill units).

2. Use a plastic scouring pad to remove any hardened food particles or mineral deposits. IMPORTANT: Do NOT use steel wool for cleaning.

3. Rinse warmer thoroughly with a vinegar and water solution to neutralize all detergent cleanser residue.

4. Inspect warmer flange-to-counter seal. Reseal with food-grade silicone sealant if necessary. Failure to do so may allow grease and water to leak into insulation and heating element, causing a potential fire and/or electric shock hazard.

5. Inspect warmer tank for damage. Damage to the outer body may allow grease and water to leak into insulation and heating element, causing a potential fire and/or electric shock hazard. Contact your Authorized Wells Service Agency to inspect warmer if water or grease contamination is suspected.

6. Close drain valve. Add proper amount of warm water. Turn control knob(s) ON and check for proper operation.

WEEKLY CLEANING INSTRUCTIONS

PREPARATIONS: Remove any insets, pans and/or adapter tops (if used). Drain or remove water from well if used for wet operation.

FREQUENCY: Weekly, or whenever lime or scale is seen accumulating on the sides of the warmer pans.

TOOLS: Wells Delime Cleaner (1 package per pan)
Plastic Scouring Pad
Clean Cloth or Sponge

1. Add water to pans until water is at normal operating level (1" - 1 1/2" deep) or covers accumulated scale.
2. Heat water to maximum temperature (190°F or higher).
3. Pour contents of one package into each warmer pan. Stir to dissolve cleaner. Turn heat control OFF. Cover pans.
4. Allow solution to soak at least one hour, or overnight for heavy scale buildup.
5. Drain hot water from pans. Scrub with a plastic scouring pad. Rinse thoroughly with hot water, then dry.
6. Refill pans with hot tap water and resume operation.
7. Heavy scale buildup may require additional treatments.

FIRST AID

EYES. In case of contact, immediately flush with warm water for 15 minutes and consult a physician

SKIN. Wash with soap and water

INHALATION: Relocate to fresh air.

INGESTION: If swallowed, drink plenty of water or milk and consult a physician

EMERGENCY PHONE (800) 255-3924

INGREDIENTS
Sulfamic acid, citric acid, aluminum sulfate. Non-toxic when used as directed.

TROUBLESHOOTING SUGGESTIONS

SYMPTOM	POSSIBLE CAUSE	SUGGESTED REMEDY
No power to warmer	Circuit breaker off or tripped	Reset circuit breaker
Warmer will not heat	Temperature control not set	Set control to desired temperature
Warmer trips circuit breaker	Wet insulation	Verify flange-to counter seal is sound, or reseal with food-grade silicone sealant
	Pan leaking or other internal damage	Contact your Authorized Wells Service Agency for repairs
	Internal damage	Contact your Authorized Wells Service Agency for repairs
Warmer slow to heat	Mineral deposits on pan acting as a insulator	Clean pan(s) with Wells Delime Cleaner
	Wired to wrong voltage	Verify supply voltage - must match voltage on warmer nameplate
Drain-equipped unit will not hold water	Drain valve not fully closed	Check drain valve for debris and close fully
	Drain valve damaged or pan(s) leaking	Contact your Authorized Wells Service Agency for repairs
Auto-fill unit overflows	Water level sensor dirty	Clean water level sensor
	Internal damage	Contact your Authorized Wells Service Agency for repairs
Auto-fill unit does not fill	Water supply turned off or restricted	Be sure water supply is turned on and water supply hose is not pinched or twisted
	Bad Probe or other Internal Damage	Contact your Authorized Wells Service Agency for repairs
One or more pans of an auto-fill unit do not fill	Blocked drain manifold	Clean drain manifold

There are no user-serviceable components in the control unit or in the pan shroud. In all instances of damage or malfunction, contact your Authorized Wells Service Agency for repairs.

CARE OF STAINLESS STEEL

Stainless steel is a marvelous material: strong, lustrous and low maintenance. With a minimum of care, it will normally retain its beauty and durability for the life of the equipment. In some applications, however, special care is required in order to maintain stainless steel's special properties.

External components, such as cabinets and control panels, are finished with a grain pattern. This pleasing finish is best maintained by cleaning with a non-abrasive cleanser applied with a soft cloth. Rub only in the direction of the grain. In the absence of visible grain, rub only along the longest axis of the appliance.

Restore stainless steel's luster by applying a polish specifically made for stainless steel. Spray on, wipe off with a soft cloth, rubbing in the direction of the grain.

Never use metal implements, wire brushes, abrasive scratch pads or steel wool to clean stainless steel.

Warmer pans, insets and other vessels are subject to a harsher environment. Wells Manufacturing uses an very high quality stainless steel (#304DDQ) for our food warmer pans. Even the highest quality stainless steel, however, is mostly iron, and will rust, pit and corrode under the following conditions:

- **Poor Water Quality:** Hard water (water with a high content of dissolved minerals) will leave mineral deposits when allowed to dry. Calcium (lime) can buildup on heated surfaces, even under water. If left unattended, hard water spots and lime buildup can lead to rusting, corrosion and pitting.
- **Contact with Chlorides:** Chlorides (specific compounds of chlorine) are found in food, table salt and many cleansers. Chlorides can attack the surface of stainless steel, resulting in corrosion and pitting.

  Keep your stainless steel warmers clean and free from calcium buildup.
  Use alkaline, alkaline chlorinated or non-chloride cleanser.
  Use citric acid-based cleaners to remove calcium deposits.

For additional information, please read the NAFEM Stainless Steel Equipment and Cleaning Guide. Contact NAFEM at :

North American Association of Food Equipment Manufacturers
401 N. Michigan Avenue
Chicago, Illinois 60611-4267
(312) 644-6610

Always use an inset.
DO NOT place food directly into the warmer pan.

DESCRIPTION	PART NO.
ADAPTERS & INSETS	
ADAPTER TOP, convert SS-8 to hold 4 qt. inset	20177
ADAPTER TOP, convert SS-10 to hold 4 qt. inset	20822
ADAPTER TOP, convert SS-10 to hold 7 qt. inset	20175
ADAPTER TOP, convert SS-206 to hold two 7 qt. insets	20176
ADAPTER TOP, convert SS-206 to hold two 4 qt. insets and two 2½ qt. insets	20434
ADAPTER TOP, convert SMPT, HW/SMP or 1 side of TMPT to hold three 4 qt. insets	21615
ADAPTER TOP, convert SMPT, HW/SMP or 1 side of TMPT to hold one 7 qt. and one 4 qt. inset	21617
ADAPTER TOP, convert SMPT, HW/SMP or 1 side of TMPT to hold one 11 qt. and one 7 qt. inset	21621
ADAPTER TOP, convert 12" x 20" warmer to hold two 7 qt. insets	21502
ADAPTER TOP, convert 12" x 20" warmer to hold two 4 qt. and two 2½ qt	21503
ADAPTER TOP, convert 12" x 20" warmer to hold three 4 qt. insets	21616
ADAPTER TOP, convert 12" x 20" warmer to hold one 7qt. and one 4 qt.	21618
ADAPTER TOP, convert 12" x 20" warmer to hold four 2½ qt. insets	21623
ADAPTER TOP, convert 12" x 27" SMPT-27 to hold three 7 qt. insets	21503
2½ QT. ROUND INSET w/ lid	20773
4 QT. ROUND INSET w/ lid	20774
7 QT. ROUND INSET w/ lid	20587
11 QT. ROUND INSET w/ lid	20908
11 QT. ROUND INSET w/ hinged lid	21057

DESCRIPTION	PART NO.
ACCESSORIES	
6 oz. SOUP LADLE	21764
WELLSLOK EXTENSION KIT, for UL LISTED circular warmers only, adapt to wood counter up to 1¾" thick	22592*
WELLSLOK EXTENSION KIT, for UL LISTED 12" x 20" warmers only, adapt to wood counter up to 1¾" thick	22593*
* **Wellslok Extension Kits for UL Listed units approved for installation in wood counter tops** One well units require one kit / Two and three well units require two kits / four and five well units require three kits	
DRAIN VALVE EXTENSION KIT, extension from drain to counter front with remote handle, for use with "D" models only, excluding "DM" models	20385
DRAIN SCREEN	21709
OPTIONAL 72" WIRING, thermostatically controlled warmers	**
** contact factory customer service for availability	
DELIME CLEANER (Case of 24 7 oz. packets)	22838

IMPORTANT: Use only factory authorized service parts and replacement filters.
For factory authorized service, or to order factory authorized replacement parts, contact your Wells authorized service agency, or call:

Wells Bloomfield, LLC
2 Erik Circle
P. O. Box 280
Verdi, NV 89439

Service Parts Dept.
phone: (775) 689-5700
fax: (888) 492-2783

Service Parts Department can supply you with the name and telephone number of the WELLS AUTHORIZED SERVICE AGENCY nearest you.

CUSTOMER SERVICE DATA

please have this information available if calling for service

RESTAURANT _____ LOCATION _____
INSTALLATION DATE _____ TECHNICIAN _____
SERVICE COMPANY _____
ADDRESS _____ STATE _____ ZIP _____
TELEPHONE NUMBER (____)____-_____

EQUIPMENT MODEL NO. _____
EQUIPMENT SERIAL NO. _____
VOLTAGE: (check one) ❑ 120 ❑ 208 ❑ 240

INSTALLATION INSTRUCTIONS

BUILT-IN MODULAR WARMERS

MOD-300, MOD-300D, MOD-300T
MOD-300TD, MOD-300DM
MOD-300TDM, MOD-300EUT

ELECTRICAL

MODELS	VOLTS	WATTS	AMPS PER LINE 3 PHASE			AMPS SINGLE PHASE	FIELD WIRING GAUGE		TEMP. RATING
			L1	L2	L3		3 PHASE	1 PHASE	
MOD-300	208	2700	7.5	7.5	7.5	13.0	12	12	75°C
MOD-300	240	3600	8.7	8.7	8.7	15.0	12	12	75°C
MOD-300T	208	3720	10.3	10.3	10.3	17.9	12	10	75°C
MOD-300T	240	4950	11.9	11.9	11.9	20.6	12	10	75°C
MOD-300EUT	220-240	4950				20.6		2.5mm²	90°C

ALL MODELS WITH A 'D' OR 'DM' SUFFIX HAVE THE SAME ELECTRICAL SPECIFICATIONS AS THE STANDARD MOD-300 OR MOD-300T MODELS.

CUTOUT DETAILS

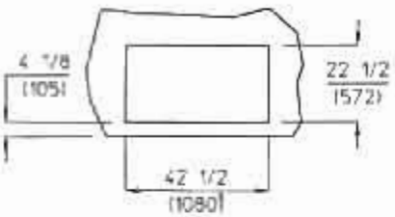

TOP CUTOUT

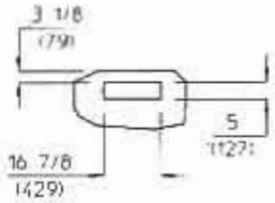

FRONT PANEL CUTOUT

PRODUCT DIMENSIONS

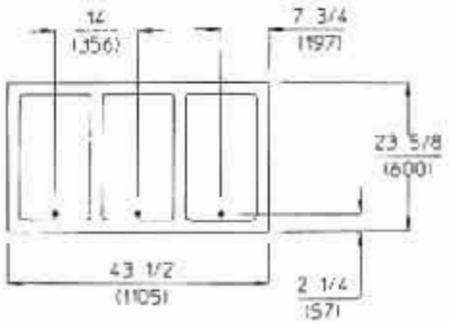

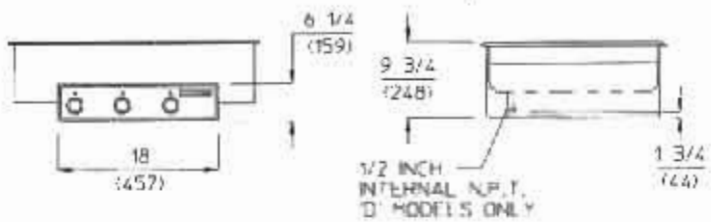

CLEARANCES

MINIMUM CLEARANCE REQUIRED FROM UNIT TO THE NEAREST SURFACE			
BACK	SIDE	BOTTOM	FRONT
1 (25)	1 (25)	6 3/4 (171)	4 1/8 (105)

INSTALLATION INSTRUCTIONS

NOTE: MOD-300 UNITS ARE SHIPPED THREE PHASE AND ARE FIELD CONVERTIBLE TO SINGLE PHASE. THE DRAIN MANIFOLD WITH 1" INTERNAL NPT VALVE IS SUPPLIED FOR DM AND TDM MODELS ONLY.

INSTALLER MUST MEET CONDITIONS OF ACCEPTABILITY OUTLINED BELOW UPON INSTALLATION:
1. Required Installation Clearances:
Wooden and Metal Installation: DO NOT install closer than 4 1/8 inches to front wall, 1 inch to back and side walls, and 6 3/4 inches to a surface below the unit. If the control box is located below the unit, the front clearance may be 1 inch.
2. Unit shall be accessible for servicing from the bottom.
3. If storage is to be used underneath the unit, it is recommended that a baffle be placed 8 1/2 inches below the unit to avoid contact with elevated temperatures.

TO FABRICATE:
1. Layout "cutout" dimensions on countertop and front apron.
2. Layout and fabricate control panel holes in counter apron using control box as a template.
3. Cut out holes. (note: "stiffening" around perimeter of "countertop cutout" is not normally required).
4. Unit shall be accessible for servicing from the bottom.

TO INSTALL:
IMPORTANT - DO NOT disconnect "lead wires" from the Master Control Panel when making installation.
1. Tilt and pass Control Panel and electrical box through countertop cutout, then through apron cutout. Lower modular section into countertop cutout and position. RECOMMENDATION: Before final seating of modular section to countertop, apply a bead of silicone adhesive/sealant to underside of gray gasket material supplied on mounting flange.
2. From underneath, insert screwdriver into "slots" in Wellslok frame and twist "ears" outward (clockwise) as required to secure flange tightly to countertop.
3. Mount the Control Box to the apron cutout as shown in the drawing.
4. Mount Control Panel onto electrical box using screws supplied.

TO PLUMB:
1. A drain manifold complete with valve is supplied on all Model "DM" and "TDM" units. Location of valve handle is at the discretion of the fabricator. Install and tighten pipe plug in one end of the manifold.
2. Warmers with 'D' suffix are supplied with individual 1/2" female N.P.T. drains.
3. Connect 1" drain connection to suitable drain line.

TO WIRE:
1. Final connection is accomplished by bringing proper power supply leads (see 'wiring requirements' label) through conduit knockout to terminal block supplied within the Master Control Panel. Check nameplates for voltage and phase.
2. Do not connect to a circuit operating at more than 150 volts to ground.

NOTE: INSTALLATION MUST MEET LOCAL PLUMBING AND ELECTRICAL CODES.

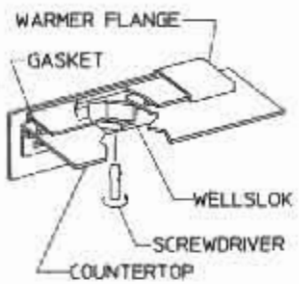

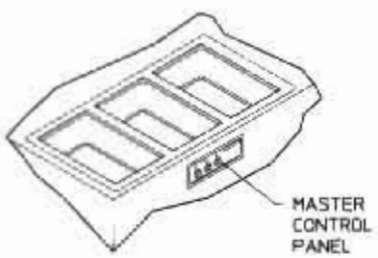

IMPORTANT:
MOUNT APPLIANCE SO THAT BOTH THE CONTROL PANEL AND DRAIN MANIFOLD ARE LOCATED TO THE FRONT OF THE FIXTURE.

WIRING DIAGRAM FOR MOD 300T, 327T WARMER

208/240V SINGLE & THREE PHASE

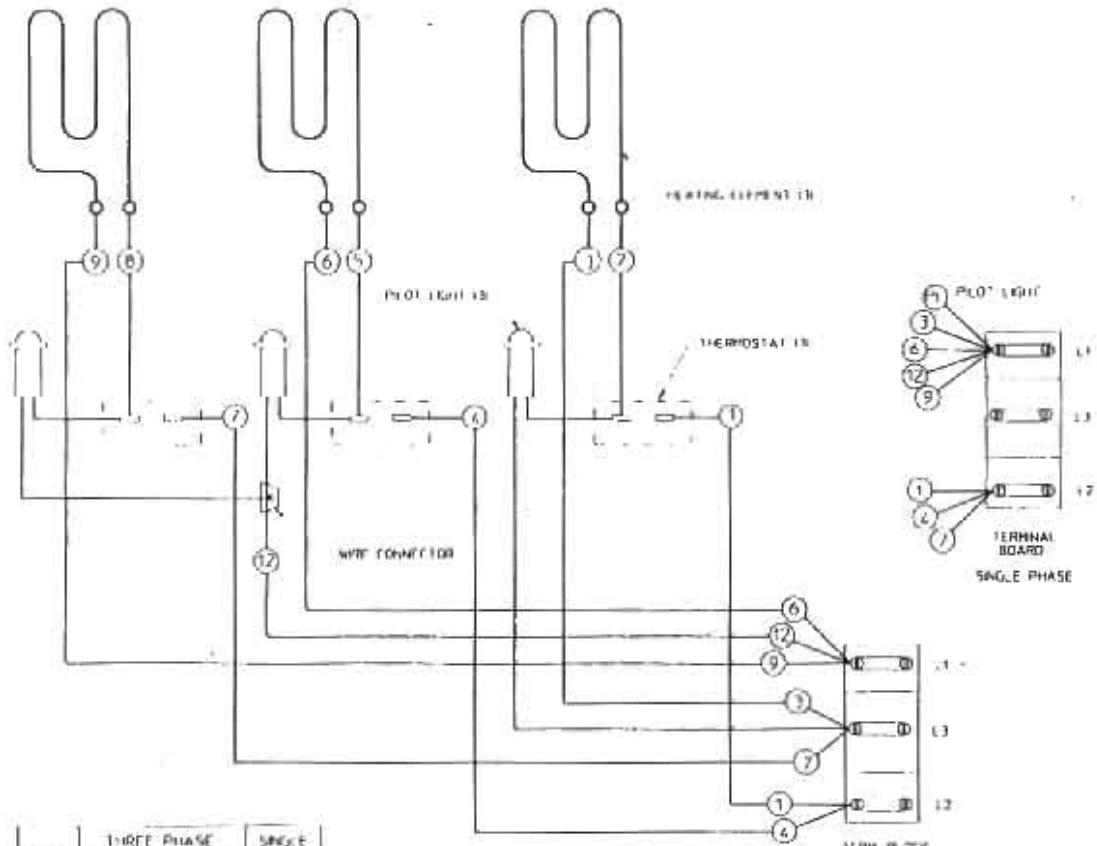

SINGLE PHASE

VOLTS	THREE PHASE			SINGLE PHASE	
	L1	L2	L3		
208	10.3	10.3	10.3	17.9	50 / 60 HZ
240	11.9	11.9	11.9	20.6	

REV. E P/N 48589